Optica Applicata, Vol. IX, No. 1, 1979

CGH-testing of rotational-symmetric aspheric in compensated interferometers

JOHANNES SCHWIDER, REGINA BUROW, JÜRGEN GRZANNA

Zentralinstitut für Optik und Spektroskopie der Akademie der Wissenschaften der DDR, Berlin, DDR.

Steeply curved asphericS require special measures to become testable with the help of computer-generated holograms (CGH). Spherical single lenses have been used to generate the main part of the wavefront curvature. The latter can be tested by other methods. In this way the macrogeometry of the aspherics can also be measured with high accuracy. Because of the flexibility of the plotter concept (e.g. wide spatial frequency range) applied to rotational symmetric synthetic holograms (RSH) the strong wave aberrations of the spherical single lenses can be tolerated. The best solution for an aspheric interferometer with the help of RSH is a compensated set-up where the RSH transforms the aspheric wavefront into a plane (spherical) one. The arrangements in transmitted as well as in reflected light are discussed, and typical interferograms of two different aspherics given.

Introduction

Since the first proposal for the usage of computer-generated holograms (CGH) in testing of aspherics by PASTOR [1], numerous publications have appeared (for a survey of the literature on this subject see [2]) dealing with the problem of interferometrical testing by means of CGH. Most publications are centred on off-set type CGH. Only some publications describe arrangements which make use of the rotational symmetry of aspheric surfaces [3, 4]. Our own efforts are based on rotational-symmetric synthetic holograms (RSH) [5].

The RSH-concept is promising, especially in the case of steeply curved aspherics. Some aspects concerning interferometer geometries in transmitted and in reflected light shall now be discussed to some extent.

Basic principle

Interferometry allows to compare wavefronts with each other. Interferometric test of optical surfaces presupposes the existence of an ideal master wavefront. One of the methods by which an ideal wavefront can be generated is the use of diffracted wavefield from a CGH. Usually the CGH is situated outside the interferometer, mostly at the interferometer exit, but strongly aspheric surfaces generate wavefronts that convolve. On account of such convolutions of the wavefronts generated by aspheric surfaces it is necessary to place the RSH inside the interferometer. When the distance between the RSH and the aspheric surface becomes too large, the RSH can no longer be considered as two-beam interferogram. In some parts of the RSH it will become necessary to plot three- or multiple-beam interference fringes.

The plotting procedure becomes then cumbersome. In order to avoid such complications we use the concept of image plane holography throughout. This allows to avoid complicated plotting procedures, because the modulus of the complex amplitude of the aspheric wave can be considered as constant.

Usually the CGH is situated in one arm of the interferometer and the surface to be tested in the other. As discussed in [6] series arrangements are also possible. In this case the RSH acts as compensator reconstructing the reference wave when the aspheric wave hits the RSH.

So far it has been assumed that the RSH alone generates the ideal wavefront. This assumption leads inevitably to RSH with high spatial frequencies. Therefore it becomes difficult to plot RSH with sufficient accuracy. Unfortunately, the majority of aspheric are deformed spheres with a rather big curvature. But by adding a spherical lens of appropriate power to the RSH the demand for high spatial frequencies can be relieved. The spherical lens generates the main part of wavefront curvature so that the RSH has only to cope with the aspheric wavefront aberrations.

The additional lens can be either a single lens or a lens system. Single plano-convex (or-concave) lenses are preferred for two reasons. Firstly the optical axis of a plano-convex (-concave) lens coincides with the normal of the plane surface easing the adjustment within the interferometer, and secondly no decentring errors are possible. Furthermore, one can easily test the two boundary surfaces of the lens and the homogeneity of the glass body. So the remaining aberrations due to the limited production accuracy can be measured and subtracted from the deviation data. Nevertheless, a more complex lens system may fulfill the sine condition and render exact lateral adjustments unnecessary.

There are two broad classes of possible interferometric arrangements: interferometric arrangements in transmitted light and in reflected light. A further aspect for classification is also furnished by the position of the RSH relative to the aspheric and the auxiliary lens.

In order to clear up this point let us consider the intensity distribution stored in a normal hologram. The two coherent complex amplitudes of the reference and the objects waves may be denoted as r or o, respectively, leading to:

$$I = |r+o|^2 = rr^* + oo^* + ro^* + r^*o, \tag{1}$$

where the asterisk denotes the complex conjugate.

According to the two different reconstruction geometrics and under the assumption that the amplitude transparency is proportional to the intensity (see (1)) we have:

— for an arrangement of the RSH in the parallel branch of the interferometer:

$$rI = r(|r|^2+|o|^2)+r^2o^*+\underline{o},$$

— for a series arrangement of RSH and aspheric plus compensating lens:

$$oI = o(|r|^2+|o|^2)+\underline{r}+r^*o^2.$$

The underlined complex amplitudes are then used for testing.

Arrangement in transmitted light

The last mentioned design in case of transmitted light leads to a set-up given in fig. 1*) where a series arrangement of aspheric, auxiliary lens, and RSH is realized. The main advantage of such a compensated arrangement is the plane wave in- and output of the Mach–Zehnder interferometer.

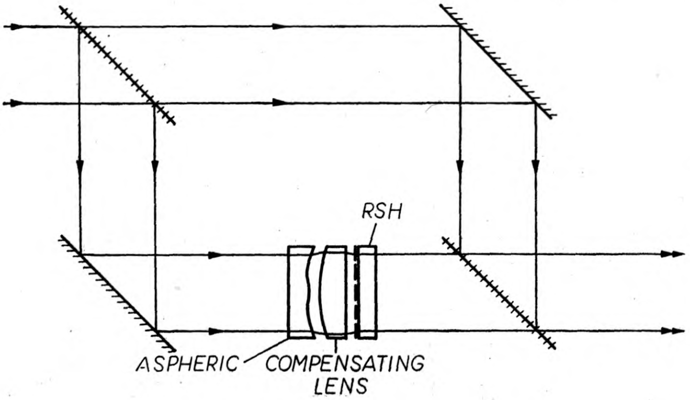

Fig. 1. Scheme of a compensated interferometer in transmitted light. The compensating lens generates the main part of wavefront curvature

This plane wave in- and output is brought about by using the series arrangement of the RSH. The aspheric wavefront deviations are compensated by the RSH. Therefore the beam splitting optics does not introduce spherical aberration even in the case when pathlengths in glass in the two arms of the interferometer are different. Besides the diameter of the light bundles remains nearly constant. A further advantage of the plane wave approach is the applicability of telescopic lens system in a double diffraction set-up, as discussed in [6]. Such double diffraction set-ups serve as well

---

*) In the case that the back surface of the aspherical lens is not plane but spherical plano-convex (or -concave) spherical lens of the same refractive index could be attached with immersion oil.

as spatial filtering device and/or as common-path interferometer for image plane compensation of phase errors due to RSH-substrate imperfections (see [6]).

A very simple interferometer can be built, provided that the RSH substrate and the collimating optics are free from imperfections. As shown by Smartt and Strong [7] it is possible to generate the reference wave by diffraction at a small point aperture*).

This aperture with a semitransparent surrounding (only a few percent transmissivity) is placed in the plane of the strongest constriction of the focused light beam. The diffracted wave is an ideal spherical wave which interferes with the wavefield passing through the semitransparent amplitude filter next to the diffraction hole. A lateral displacement yields tilt fringes (corresponding to lateral shift of focus) and an axial one yields a quadratic phase function [8]. If this concept is applied to the transmitted light arrangement of fig. 1, the reference branch can be omitted. To make use of the point diffraction interferometer [7] the wavefield emerging from the series arrangement of aspheric, compensating lens and RSH has to be focused. The focusing optics as well as the beam expander at the entrance side of the described combination should at least be free from nonspherical aberrations to guarantee a sufficient measuring accuracy. Spherical aberration can be taken into account by the RSH. Possible disturbing wavefields originating from the RSH can be screened off by introducing a stop in the focal plane. The whole set-up is a common-path interferometer which in contrast to other interferometers is insensitive to mechanical shock and vibrations. This device should suit especially industrial needs.

Fig. 2 shows an example of a test interferogram of a concave aspheric with a vertex radius of ca. 60 mm and severe (about 0.5 mm) aspheric deviations. The interferogram was taken with a set-up shown in fig. 1.

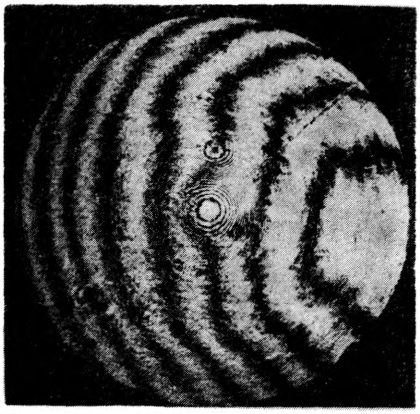

Fig. 2. Test interferogram of a concave aspheric (vertex radius ca. 60 mm) with strong aspheric deviations from the vertex circle (about 0.5 mm). One fringe corresponds to ca. 1.2 μm surface deviation

---

*) The interferometer is also called "point diffraction" interferometer.

The RSH-substrate errors were compensated by an external hologram as discussed in [6]. The RSH calculating and plotting procedure was also given there and in more detail in [9]. In the special case of fig. 2 the width of the RSH-zones had to be adapted to the spacing of adjacent zones because of the strong variation of the spacing from the centre to rim of the RSH. Without such a width control the fringe contrast in the centre is low.

Arrangement in reflected light

In reflected light the compensation of the spherical part of the wavefront deformation is even more necessary since wavefront deformations generated by surface deformations are about four times as big as in transmitted light. Therefore only aspheric surfaces weakly departing from a flat can be tested without auxiliary lenses or a special collimator.

We discuss here only a set-up in which a RSH is situated in one arm of a Michelson-interferometer and compensating lens together with the aspheric in the other one. This restriction is due to the difficulties of a series arrangement of all components in a reflected light interferometer. In a forthcoming publication we shall deal with the problems concerning a series arrangement of all components in a reflected light interferometer.

Fig. 3 shows an arrangement with a reflection-type RSH in one arm. Under the assumption that the RSH is flat, e.g. to a $\lambda/20$ degree, an external compensation hologram for substrate imperfections can be avoided. The spherical curvature of the aspheric wavefront is furnished by the compensating lens (here plano-convex) in the test arm of the Michelson-interferometer. The unwanted diffraction orders of the RSH are screened

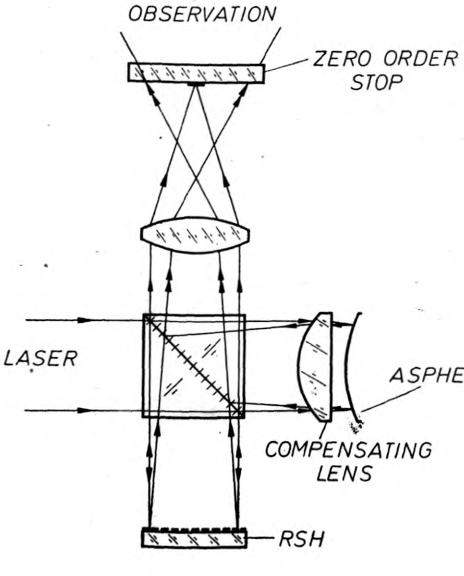

Fig. 3. Scheme of a compensated interferometer in reflected light. The RSH is used similarly to a reflecting grating. The zero order is screened off by an opaque stop

off by a stop in the back focal plane of a field lens, the zero order — by an opaque patch and the order representing the conjugate aspheric wave — by an aperture stop. The parasitic interference systems of the conjugate aspheric wave and of the wave emerging from the test arm (e.g. reflexes from spherical and plane surfaces) are high frequent and impede only the visibility of the resulting interferogram. The reflection type RSH is produced by contact printing an amplitude RSH on a photoresist layer 0.15 μm thick.

Fig. 4 shows a test example obtained in a set-up, according to fig. 3. The aspheric was a convex collimating single lens with vertex radius of 62.6 mm and an aspheric deformation of about 0.4 mm. The compensating lens was about 24 mm thick and its radius of curvature was 45.34 mm long. As the spatial frequency of the RSH becomes nearly zero in a outer region, the fringes are missing in a small ring zone.

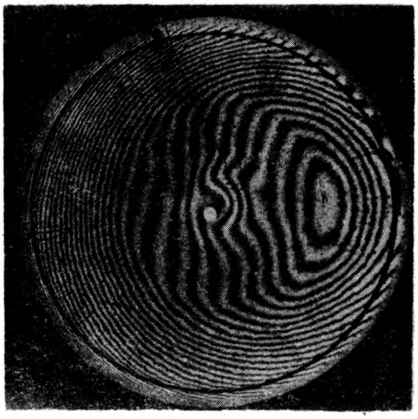

Fig. 4. Interferogram of a convex aspheric taken with an arrangement shown in fig. 3. One fringe distance corresponds to ca. 0.3 μm

Conclusion

Applying two interferometric set-up it has been shown that steeply curved aspherics can also be tested with the help of CGH. For this purpose compensating single lenses can be used. A wide variety of test situations become manageable by this spherical precompensation of aspheric wave fields. The RSH have spatial frequencies up to 150 mm^{-1} and in both cases the number of ring zones amounts to ca. 900 per radius of the RSH.

References

[1] PASTOR J., *New Developments in Interferometry*, Perkin Elmer Corp., Report, 1967.

[2] SCHULZ G., SCHWIDER J., *Interferometric Testing of Smooth Surfaces*, Progress in Optics **13**, ed. E. Wolf, North Holland Publ. Comp., Amsterdam 1976, p. 95–167.

[3] Buinov G. N., Larionov N. P., Lukin A. V., Mustafin K. S., Rafikov R. A., Opt.-Mech. Prom. (Leningrad) **38**, 6 (1971).

[4] Ichioka Y., Lohmann A., Appl. Opt. **11**, 2597 (1972).

[5] Schwider J., GDR-Patent No. 01b/156 740, 1971.

[6] Schwider J., Burow R., Opt. Appl. **VI**, 83 (1976).

[7] Smartt R. N., Strong J., *Ealing Catalogue*, 1976, p. 425.

[8] Born M., Wolf E., *Principles of Optics*, Pergamon Press, London, New York, Paris, Los Angeles 1959, p. 461.

[9] Schwider J., *Hologram-interferometric test methods for aspherics*, Doctor's Thesis. Subm. to TH Ilmenau, 1977.

Received, April 12, 1978

Исследование вращательно- симметричной асферической линзы в компенсированных интерферометрах методом голограмм, порождаемых ЭЦВМ

Асферические линзы крутой кривизны требуют специальных операций для того, чтобы они могли испытываться при помощи голограмм, порождаемых ЭЦВМ (ГПЭЦВМ). Для создания главной части кривизны фронта волны применены единичные сферические линзы. Эта кривизна может исследоваться другими методами. Таким образом можно измерять с высокой точностью и макрогеометрию асферических линз. Из-за несложности приспособления пищущего прибора (широкий пространственный частотный диапазон), употребленного для вращательных синтетических симметричных голограмм, допускаются сильные волновые аберрации отдельных сферических линз. Для асферического интерферометра наилучшим зажиганием с помощью RSH является компенсированный набор, в котором RSH преобразует фронт волны в плоский (сферический). Этот прибор обсужден для случая передаваемого света и для отражаемого. Приведены типовые интерферограммы двух асферических линз.