KAPITAŁ LUDZKI
NARODOWA STRATEGIA SPÓJNOŚCI
Politechnika Wrocławska
UNIA EUROPEJSKA
EUROPEJSKI
FUNDUSZ SPOŁECZNY

ROZWÓJ POTENCJAŁU I OFERTY DYDAKTYCZNEJ POLITECHNIKI WROCŁAWSKIEJ

Wrocław University of Technology

Automotive Engineering

Marek Kułażyński, Zbigniew J. Sroka

GREEN FUELS
Laboratory

Wrocław 2011

Projekt współfinansowany ze środków Unii Europejskiej w ramach
Europejskiego Funduszu Społecznego

Wrocław University of Technology

Automotive Engineering

Marek Kułażyński, Zbigniew J. Sroka

GREEN FUELS
Laboratory

Wrocław 2011

Copyright © by Wrocław University of Technology
Wrocław 2011

Reviewer: Jerzy Walendziewski

ISBN 978-83-62098-10-1

Published by PRINTPAP Łódź, www.printpap.pl

Contents

1.	Introduction	4
2.	Motor gasoline	5
3.	Diesel fuel	7
4.	Sampling methodology	10
5.	Determination of specific gravity of gas by the Schilling effusion method	13
6.	Determination of density of liquid petroleum products by hydrometer method	16
7.	Determination of gum content in gasoline	24
8.	Determination of flash and fire points of liquid fuels	28
9.	Determination of kinematic viscosity by the Ubbelohde method	34
10.	Determination of the fractional composition by distillation method at atmospheric pressure	39
11.	Calculation of cetane index of middle-distillate fuels by the four-variable equation	44
12.	Obtaining of methyl ester (Biodiesel) from rapeseed oil: Transesterification process using microwave irradiation	46
13.	Determination of ash content	53
14.	Determination of the corrosive effect of petroleum products on metals	56
15.	Analysis of gas composition by means of a gas chromatography	59
16.	Determination of cold filter plugging point (CFPP)	65
17.	Determination of aniline point	71
18.	Determination of combustion heat and calorific value of liquid fuels	74

1. Introduction

Laboratory-bench tests replaced the old-time practice of estimation the properties of fuels by the senses, and have thus been able to ensure the proper product quality. Many of the test methods are quite arbitrary in nature, but a number of such physical and/or chemical tests together give some indication of the suitability (or unsuitability) of fuels for different applications.

The tests are also important for general handling safety, customs and excise dues, and so on.

Laboratory tests for fuels are standardized in respect of design of apparatus, experimental procedure, reporting of results, etc., by such bodies as the Institute of Petroleum in the United Kingdom, and the American Society for Testing and Materials in the United States and working details of the tests are published annually. Such standardization helps to achieve results with acceptable repeatability (the same operator with same apparatus) and reproducibility (different operator with similar apparatus).

A growing number of fuel tests have now been adopted jointly by I.P. and A.S.T.M. For convenience in this present study, the tests are subdivided into *property* tests, which are direct determinations of fuel properties, and *component* tests, which are measures of fuel constituents and/or contaminants and therefore indirect measurements of properties. The former are generally physical in nature, and the latter chemical.

In determining the nature of a hydrocarbon fuels and their industrial applications, an understanding of the significance of the test results is as important as knowledge of the tests themselves. Furthermore, since the petroleum-based fuels and green fuels are fairly closely related to each other in molecular structure, an inter-relationship is found between measured fuel properties, particularly those concerned with volatility. The eight most basic property tests have therefore been selected here.

2. Motor gasoline

Gasoline is a fuel used to power internal combustion engines with spark ignition. It is a mixture of hydrocarbons boiling at temperatures from approx. 30°C to 210°C. The chemical composition of gasoline determines the physicochemical and practical properties of the fuel. Commercial motor gasoline is a mixture of hydrocarbons derived from crude oil distillation, catalytic reforming processes, cracking as well as high quality products of isobutene alkylation with C_3-C_5 olefins, products of isomerization, hydrocracking, and others. Hydrocarbon composition of gasoline can vary depending on the type of processed raw material and processing technology. Motor gasoline must meet certain standardized functional properties; therefore gasoline is composed of several streams available at the refinery. The number of available streams with the temperature corresponding to the boiling point of gasoline depends on the type of refinery. The process of composing should result in gasoline characterized by: effective and fast evaporation, smooth (knock-free) combustion, non-toxic combustion products, stability under storage and transport conditions and minimal environmental impact. In addition, gasoline should not be corrosive to engine construction metals and should not form deposits disrupting engine operation.

Gasoline is composed with the use of high-octane organic oxygen compounds – alcohols and ethers. These compounds have replaced the toxic additive previously used to increase the octane number of fuel – tetraethyl lead. They also allow reduction of the aromatic and olefin hydrocarbon fractions. Oxygen components contribute positively to composition of exhaust fumes; also, their addition increases vapor pressure of gasoline, which facilitates cold starting the engine and its operation at low temperatures. The oxygenates most commonly used in composing gasoline are: methanol in mixture with higher alcohols, ethanol, t-butanol, methyl tert-butyl ether (MTBE), ethyl tert-butyl ether (ETBE), and tert-amyl methyl ether (TAME). The amount of oxygenates in terms of oxygen content in gasoline is limited by the standards.

Modern gasoline also contains improvers. These are various types of chemicals or their mixtures, added in the amount no greater than 1,500 mg/kg of fuel in order to improve its operating characteristics. Although refining itself is not covered by standards, fuel manufacturers commonly use additive packages that are characteristic of their fuels. Professional producers use improvers in own fuels as a package individually selected for particular gasoline. Such a package may include: a detergent (prevents the formation

of deposits in the fuel supply system and on the throttle, inlet valves, and injectors), a corrosion inhibitor (protects against the corrosive impact of petrol), a demulsifier (prevents the formation of emulsions and thus helps in the separation of water), an antioxidant (prevents the formation of gums), and other additives, such as colouring additives used to distinguish grades of gasoline, fragrant additives, and markers for identifying the manufacturer.

Currently all gasoline on the market is already unleaded, i.e. it does not contain the antiknock agent in the form of the once-popular lead tetraethyl. According to the current standards in Poland and the EU countries, the lead content in gasoline must not exceed 0.005g/dm^3. This content is now only associated with lead compound residue present in process lines, tanks, and gas pumps. Standardized gasoline properties are characterized by: - operating quality of fuel - stability of fuel during transport and storage – contents of the components adversely effecting the environment.

Analysis of gasoline includes determination of the following:

1. Determination of the octane number (Research Method), RON PN-EN ISO 5164; ASTM D 2699.
2. Determination of the octane number (Motor Method), MON PN-EN ISO 5163; ASTM D 2700.
3. Sulphur content PN-EN ISO 20846: PN-EN ISO 20884; PN-EN ISO 14596; ASTM D 5453.
4. Induction period PN-ISO 7536.
5. Actual gum content (after washing with solvent) PN-EN ISO 6246
6. Copper strip corrosion (3 hours at a temperature of 50 °C) PN-EN ISO 2160; ASTM D 130.
7. Aromatic and olefin hydrocarbon content PN-EN 14517; PN-EN 15553. ASTM D 1319.
8. Benzene content PN-EN 12177; PN-EN 238; PN-EN 14517.
9. Oxygen content PN-EN 13132; PN-EN 14517.
10. Content of oxygen-containing organic compounds (methanol, ethanol, isopropyl alcohol, isobutanol, tert-Butanol, ethers, and other oxygen-containing organic compounds) PN-EN 13132; PN-EN 14517.
11. Ether content EMTB, EETB PN-EN 13132; PN-EN 14517.
12. Vapour pressure PN-EN 13016-1.
13. Fractional composition (distillation) PN-EN ISO 3405.

3. Diesel fuel

Diesel fuel is a liquid fuel for compression-ignition engines (diesel engines). The main component of diesel fuel is a mixture of paraffins, naphthenes, and aromatics, obtained by distillation of crude petroleum at a temperature of 180-350°C and at atmospheric pressure. Due to the high sulphur content in these distillates, its must be removed by means of hydrogen treatment in catalytic processes (hydrorefining). Diesel fuel also includes products derived from distillation residue fractions, but this involves catalytic breakdown processes (catalytic cracking, hydrocracking). So, the composition and relative proportions of hydrocarbons contained in diesel fuels are different depending on the nature of the processed petroleum and the technological processes involved in its production.

The most important fractions from crude petroleum processing used to compose diesel fuel are: kerosene, light diesel fuel, middle diesel fuel, heavy diesel fuel, hydrorefined diesel fuel, hydrocracked diesel fuel, and catalytically cracked diesel fuel.

These components are characterized by different physicochemical properties and while composing diesel fuel some can be used in full and others in limited quantities. Composition of diesel fuel includes fatty acid methyl esters (FAME) and their current standardized content is 7-7.5 % V/V.

Diesel fuel also contains a package of improvers. These are various types of chemical compounds or their mixtures, added in the amounts no greater than 1 500 mg/kg of fuel. They are intended to improve the storage and distribution properties of fuel and, above all, its functional properties so as to extend the period of trouble-free engine operation.

The fuel storage and distribution system uses the following additives: pour point depressants – improve low-temperature properties (e.g. modify n-paraffins to small crystals passing through fuel filters), corrosion inhibitors – prevent corrosion caused by the presence of water and sulphur compounds, anti-aging additives – antioxidants, metal deactivators, dee mulsifiers – prevent formation of stable water emulsions, foam inhibitors – they are used due to the natural tendency of diesel fuels to foam during pumping, biocides – prevent development of microorganisms in the stored diesel fuels (microorganisms grow at the water-diesel fuel phase boundary at the bottom of storage tanks and their development causes formation of large amounts of deposits, fuel clouding, and greater stability of the fuel-water emulsion), azo dye compounds – used to distinguish grades of diesel fuel, and markers –their type and methods of detection are not disseminated because they enable identification of fuel origin.

Analysis of diesel fuel includes determination of the following:

1. Cetane number, PN-EN ISO 5165.
2. Cetane index, PN-EN ISO 4264.
3. Content of polycyclic aromatic hydrocarbons, PN-EN 12916.
4. Flash point, PN-EN ISO 2719.
5. Carbon residue (from 10% distillation residue), PN-EN ISO 10370.
6. Ash content, PN-EN ISO 6245.
7. Water content PN-EN ISO 12937:
8. Contamination content PN-EN 12662.
9. Oxidation resistance, PN-ISO 12205.
10. Lubricity, adjusted average wear scar at a temperature of 60° C, PN-EN ISO 12156-1.
11. Viscosity at a temperature of 40 ^{o}C, PN-EN ISO 3104.
12. Fractional composition, PN-EN ISO 3405.
13. Cloud point, PN-ISO 3015.
14. Cold filter plugging point (CFPP), PN-EN 116.
15. Density (at a temperature of 15° C), PN-EN ISO 3675, PN-EN ISO 12185.
16. Sulphur content, PN-EN ISO 20846, PN-EN ISO 20884, PN-EN ISO 14596.
17. Copper strip corrosion (3 hours at a temperature of 50° C), ASTM D 5453, PN-EN ISO 2160.
18. FAME content, PN-EN 14078.

Analysis of biofuel (fatty acid methyl esters - FAME) includes determination of the following:

1. Content of fatty acid methyl esters (FAME), PN-EN 14103.
2. Density at a temperature of 15°C, PN-EN ISO 3675, PN-EN ISO 12185.
3. Viscosity at a temperature of 40°C, PN-EN ISO 3104.
4. Flash point, PN-EN ISO 2719, PN-EN ISO 3679.
5. Sulphur content, PN-EN ISO 20846, PN-EN ISO 20884.
6. Carbon residue (from 10 % distillation residue), PN-EN ISO 10370.
7. Cetane number, PN-EN ISO 5165.
8. Sulphated ash content, PN-ISO 3987.
9. Water content, PN-EN ISO 12937:
10. Copper strip corrosion (3 h at a temperature of 50° C) PN-EN ISO 2160.
11. Total contamination content, PN-EN 12662.

12. Oxidation stability at a temperature of 110° C PN-EN 14112.
13. Acid number, PN-EN 14104.
14. Iodine number, PN-EN 14111.
15. Content of linolenic acid methyl ester, PN-EN 14103.
16. Methyl alcohol content, PN-EN 14110.
17. Monoacylglycerol content, PN-EN 14105.
18. Diacylglycerol content, PN-EN 14105.
19. Triacylglycerol content, PN-EN 14105.
20. Free glycerol content, PN-EN 14105.
21. Total glycerol content, PN-EN 14105.
22. Group I metal content (Na + K), PN-EN 14538.
23. Group II metal content (Na + K), PN-EN 14538.
24. Phosphorus content, PN-EN 14107.
25. Cold filter plugging point (CFPP), PN-EN 116.

When doing exercises, please observe the general safety regulations in force at the Chemical Technology laboratory.

4. Sampling methodology

The following are guidelines for sampling and preparation of an average laboratory sample of petroleum products.

Take maximum precautions when sampling gasoline and diesel fuel. Take samples as quickly as possible and under conditions not affecting the properties of the product. If sampling is required during precipitation, protect the product against rain. Also avoid direct sunlight during the sampling.

Take samples from small containers in locations protected from dust and atmospheric pollution. Prior to sampling, carefully examine the product presented for collection. In case of product non-uniformity (partial destruction, wetting) or if the external features cast doubt as to whether the product is of a single kind or grade, divide the batch into parts with similar physical characteristics, to be treated as separate batches. Reject the product in damaged containers.

Clean the containers intended for sampling with a cloth so that the product is not polluted during the opening.

Collect all samples initially intended for preparation of an average laboratory sample of a given product with the same instrument without washing it before each single sampling of the same product.

Cool down the collected initial samples and the gross sample to a temperature of 0~20°C during the preparation of an average laboratory sample. If the density of the sampled product is to be determined in a laboratory in order to convert product mass to volume, measure the product temperature during the sampling. In the case of sampling of liquid products from several levels of the tank, take samples from predetermined levels, starting from the top and ending at the bottom level. If a product quality must be determined at the lowest level, collect the sample from the very bottom of the container and analyze it separately.

Methods of sampling petroleum products not covered by the standard are determined in the relevant standards for a given product.

The size of initial samples is determined by the capacity of the instrument used for product sampling and should be constant for a given batch. The volume of gross sample should be sufficient to prepare an average laboratory sample. An average laboratory samples should have the size of approx. 3 dm^3 (or 3 kg). If the above amount is insufficient

for preparation of full analysis, the sample size should be increased accordingly, i.e. so that half the sample suffices to perform full analysis of the examined product.

When sampling liquefied petroleum gas, the initial sample is an average laboratory sample for a given container.

Using light gasoline or kerosene wash on the inside and on the outside sampling instruments, sample storage containers, and all auxiliary instruments that may be immersed in the sampled product. After washing with kerosene, rinse them with gasoline and dry with compressed air. Before sampling liquid products, wash the instruments several times with the examined product. When collecting initial samples from the batch, wash the instruments only before collecting the first initial sample.

Sample liquid petroleum products with instruments enabling either single sampling of the whole head, sampling of individual liquid levels, or sampling of individual head sections.

When sampling from tanks, prepare an average laboratory by collecting initial samples with a sampling tube or a bottle in the basket. Samples from two-axle tank trucks should be collected at a level located 1/3 of the height from the bottom of the tank. Initial samples from four-axle tank trucks should be collected in equal portions from 2 levels: one sample from the level located 1/3 of the height from the bottom of the tank and one sample from the bottom level at a distance of 250 mm from the tank bottom. In the case of sampling from tanks immediately after their filling, collect one sample from the level located 1/3 of the height from the tank bottom. When sampling a product consigned to a single consignee by rail, an average laboratory sample may be prepared from initial samples collected from every fourth tank wagon of the cargo, but no less than 2 tank wagons. Sample the upper level with a glass bottle on a piece of cord, loaded with a pure lead ring and lowered just below the surface of the product. On the other hand, collect the sample from the lower level directly from the drain cock into the bottle. The drain cocks must be pre-cleaned.

If density must be determined to convert mass to volume of the sampled product, collect the sample as follows: lower the sampler to the level located 1/3 of the height from the bottom and hold it at that level for at least 5 minutes, then pull the sampler out of the tank, quickly pour out the contents into the tank and again lower the instrument to the same level as before. After filling in, pull out the instrument and determine the density and temperature of the sampled product.

When sampling from drums, canisters etc., average laboratory samples should be prepared from equal amounts of samples collected from the following amounts of containers:

- ✓ 5% of drums, but no fewer than 2 drums,
- ✓ 1 % canisters, bottles, etc., but no fewer than 2 canisters or bottles.

If a batch contains fewer than 300 canisters or bottles, collect the samples from 2% of containers, but no fewer than two.

Mix the contents of sampling containers mechanically, by hand, by rolling the drum a number of times, or, in the case of smaller containers, by shaking, then collect samples.

Immerse an open, clean, and dry sampling tube in the product and lower it slowly, making sure that the level of the product inside the tube corresponds to the level on the outside. When the lower end of the tube touches the bottom of the container, cover the hole at the upper end with a finger, then carefully pull the tube outside and pour the collected sample into the bottle intended for the gross sample.

Samples from containers with the capacity up to 25 dm^3 can be collected by pouring the product into glass bottles, using a screw-on or push-on stopper with a funnel. Immediately pour the collected initial samples into a bottle designated for the gross sample, then, after careful mixing of the product, collect an average laboratory sample.

Observe all precautions against fire or explosion when collecting initial samples of liquefied petroleum gas. Initial samples should be regarded as average samples for a given container and should be examined directly after sampling. If determination requires 100 cm^3 or more of the product, collect samples into the Dewar flask or directly into the container used for determination. If determination requires less than 100 cm^3 of gas, collect the samples by means of a steel sampler.

The guidelines should be used when sampling fresh and used petroleum products.

Literature

1. www.ilo.org/wcmsp5/groups/public/---ed_emp/.../wcms_140859.pdf
2. ASTM D4057 - 06 Standard Practice for Manual Sampling of Petroleum and Petroleum Products
3. http://books.google.pl/books?id=J_AkNuY1wQC&pg=PA640&lpg=PA640&dq=Sampling++petroleum+products&source=bl&ots=jHudPFTbp&sig=7JZBYYv5HuE5C7tWhClEBRfA1Es&hl=pl&ei=4oA9Tcj7MsrGswbcscDzBg&sa=X&oi=book_result&ct=result&resnum=8&ved=0CFoQ6AEwBzge#v=onepage&q=Sampling%20%20petroleum%20products&f=false
4. http://www.elanso.com/ArticleModule/MGPAIYKzKzSEVIPUP0J2TgIi.html

5. Determination of Specific Gravity of Gas by the Schilling Effusion Method

The aim of the exercise is to determine the density of methane and hydrogen by the Schilling Effusion Method.

Scope

This method describes the procedure for the determination of the specific gravity of hydrocarbon and other gases whose specific gravities do not exceed 1.3.

This method is based on the kinetic theory of gases, i.e., the speed with which a gas will pass through a small opening must be proportional to the average speed of the molecules. Since the molecular speed of a gas is inversely proportional to the square root of its specific gravity, the rate of effusion is inversely proportional to the same quantity.

The respective effusion times for the sample and air to pass through the same orifice under identical conditions are measured. Since effusion time is directly proportional to the square root of specific gravity and the specific gravity of air is 1.0 by definition, the specific gravity of the gas sample may be calculated readily. The loss of energy through friction in the orifice is assumed negligible.

Fig. 1. Effusiometer Schilling.

Apparatus

Calibrated gas tube, equipped with an orifice at the outlet meeting the specifications below, and surrounded by a water jacket. The volume of the gas tube should be approximately 50 cm^3.

The orifice plate shall be platinum or stainless steel with a thickness of 0.05 to 0.10 mm. The orifice shall be round and free of burrs, with a diameter of 0.10 to 0.15 mm. Stop watch, capable of timing intervals of 0.2 second or less

Procedure

Remove the cap from the orifice tip and screw the orifice tip to the top of the 3-way cock on the glass tube. Vent the glass jar by unscrewing the vent cap at the top. Fill the glass jar with clear water to approximately 35.56 cm above the upper graduation on the glass tube. Withdraw the tube in order to fill it with air. Shut off the 3-way cock and replace the tube in the jar. Open the 3-way cock so that air will be expelled through the orifice and, with a stop watch, note and record the time required for the water to rise from the lower graduation to the upper graduation etched on the glass tube. Repeat the operation of filling the glass tube with air and timing each expulsion until readings are obtained which vary by not more than 0.2 second. Then, without the loss of any water from the glass jar, connect a length of rubber tubing from the source to the stopcock inlet and allow the gas to pass downward through the glass tube while it is in proper position in the jar. After the tube has been filled and the gas has been expelled through the orifice several times to flush air from the system, fill the tube and make note of the time required for the water level to rise from the lower to the upper graduation. Repeat this operation until readings obtained do not vary more than 0.2 second. Only final readings for gas effusion time and air time are used in calculations.

Calculations

$$Specific\ gravity\ of\ the\ gas = \frac{G^2}{A^2} \bullet 1.29$$

where:

G = time, seconds, required for the gas to pass through orifice

A = time, seconds, required for air to pass through orifice,

1.29 kg/m^3 - specific gravity of the air

<u>Precautions</u>

Keep the cap over the orifice when not in use. Clean the orifice when necessary with alcohol or ether. A washed hair may aid in cleaning. Examine the orifice periodically with a microscope. Replace the orifice when found to be corroded or burred. Test the system for

leaks if check determinations cannot be obtained. Maintain a constant water level during air and gas effusion time determinations for the same test. The temperature of gas, air and water must be within 17.5 ^{o}C for any determination. Values obtained by this method for the specific gravity of gases below 1.3 are repeatable to within +/- 1%.

Literature

1. UOP114-86 Relative Density of Gas by Schilling Effusion Method
2. http://www.elmhurst.edu/~chm/vchembook/123Adensitygas.html
3. http://www.grc.nasa.gov/WWW/K-12/airplane/fluden.html
4. http://techtv.mit.edu/videos/7972-rotating-candles-in-a-dome
5. http://video.yahoo.com/watch/5056224/13434442

6. Determination of Density of Liquid Petroleum Products by Hydrometer Method

The aim of the exercise is to determine the density of motor gasoline, diesel fuel, and rapeseed oil methyl ester by Hydrometer Method.

Scope

Mass density is one of the basic physical properties of substances, which express the ratio of the mass of substance *m* do to its volume *V*, measured at the same temperature:

$$P = \frac{m}{v}$$

The applicable unit of density is kg/m^3. Substance density depends on the pressure and temperature. The relationship between density and temperature is connected with thermal expansion.

As the temperature increases the volume of bodies increases, so the density decreases (with the exception of water). The relationship between density and temperature justifies the need to use the t index next to the density symbol, which informs about the measurement (fiducial) temperature in degrees Celsius (°C). For small temperature ranges the approximate formula is as follows:

$$\rho = \rho^{to} + \gamma(t_o - t)$$

where:

t_o-temperature of density measurement, °C

t- temperature used to calculate density, °C

γ – coefficient of thermal density changes (Tab. 1)

Density affects the weight wear of gasoline, which is fed to the engine cubically, so at higher density greater fuel mass enters the engine, resulting in a higher calorific value of the fuel/air mixture, while reduced density affects the ecological quality of exhaust fumes.

This practice covers the laboratory determination, using a glass hydrometer, of the density, relative density (specific gravity), or API gravity of crude petroleum, petroleum products, or mixtures of petroleum and no petroleum products normally handled as liquids, and having a Reid vapour pressure (Test Method D 323, or IP 69) of (179 kPa) 11.81 kg or less. Values are measured on a hydrometer at convenient temperatures, readings of density being reduced to 15°C, and readings of relative density (specific gravity) and API

gravity to 15.5°C, by means of international standard tables. By means of these same tables, values determined in any one of the three systems of measurement are convertible to equivalent values in either of the other two so that measurements may be made in the units of local convenience.

Table 1. Values of the coefficient of thermal density changes for petroleum products

Density g/cm^3 (read)	Coefficient of thermal density changes γ g/(cm^3 • °C)	Density g/cm^3 (read)	Coefficient of thermal density changes γ g/(cm^3 • °C)
0.6900÷0.6999	0.000910	0.8500÷0.8599	0.000699
0.7000÷0.7099	0.000897	0.8600÷0.8699	0.000686
0.7100÷0.7199	0.000884	0.8700÷0.8799	0.000673
0.7200÷0.7299	0.000870	0.8800÷0.8899	0.000660
0.7300÷0.7399	0.000857	0.8900÷0.8999	0.000647
0.7400÷0.7499	0.000844	0.9000÷0.9099	0.000633
0.7500÷0.7599	0.000831	0.9100÷0.9199	0.000620
0.7600÷0.7699	0.000818	0.9200÷0.9299	0.000607
0.7700÷0.7799	0.000805	0.9300÷0.9399	0.000594
0.7800÷0.7899	0.000792	0.9400÷0.9499	0.000581
0.7900÷0.7999	0.000778	0.9500÷0.9599	0.000567
0.8000÷0.8099	0.000765	0.9600÷0.9699.	0.000554
0.8100÷0.8199	0.000752	0.9700÷0.9799	0.000541
0.8200÷0.8299	0.000738	0.9800÷0.9899	0.000528
0.8300÷0.8399	0.000725	0.9900÷1.0000	0.000515
0.8400÷0.8499	0.000712		

Trading in petroleum products also uses the term ‘relative density’, expressed in terms of the ratio of the density of a substance at a given temperature to the density of the standard (mostly water at a temperature of 4 or 15 or 20°C). The adopted symbol for the relative density is d^t_{tr}, where t is the fiducial temperature for the examined substance, and t_r is the fiducial temperature for the standard substance (mostly water); it is dimensionless quantity, e.g. d^{20}_4 means that the density determined at 20°C was related to the water density at 4°C.

Density is also measured in units of the 100-degree API gravity (API degrees acc. to the American Petroleum Institute). The scale is based on measuring relative liquid density at a temperature of 15.5°C. There is a simple relationship between API and relative density $d_{60}^{60}(^{o}F)$:

$$^{o}API = \frac{141.5}{(^{o}F)} - 13.5$$

For example:

10 °API corresponds to the density of $d_{15.5}^{15.5}$ = 1.000.

50 °API corresponds to the density of $d_{15.5}^{15.5}$ = 0.779.

In the case of fuels the quantity by weight, i.e. the mass of fuel flowing through the injector nozzle holes per unit time is directly proportional to its density. When a higher-density gasoline is used, the result is a richer mixture and increased fuel consumption.

Table 2 shows the density ranges of the basic fuel groups.

Table 2. Density ranges of the basic fuel groups

Fuel type	Density range, g/cm^3 (w 20 °C)
Aviation gasoline	0.690÷0.770
Motor gasoline	0.720÷0.770
Fuel for aviation turbine engines	0.770÷0.860
Diesel fuel	0.825÷0.845

Apparatus

Hydrometers, glass, graduated in units of density, relative density (specific gravity), or API gravity as required, conforming to ASTM specifications or specifications of the British Standards Institution.

Thermometers, having ranges and conforming to specifications of the American Society for Testing and Materials or the Institute of Petroleum.

Hydrometer cylinder, clear glass, plastic or metal. For convenience in pouring, the cylinder may have a lip on the rim. The inside diameter of the cylinder shall be at least 25 mm greater than the outside diameter of the hydrometer used in it. The height of the cylinder shall be such that the appropriate hydrometer floats in the sample with at least 25 mm clearance between the bottom of the hydrometer and the bottom of the cylinder.

Hydrometer cylinders constructed of plastic materials shall be resistant to discoloration or attack by samples and must not become opaque under prolonged exposure to sunlight and oil samples. Constant-Temperature Bath, for use when the nature of the sample requires a test temperature much above or below room temperature.

The user should ascertain that the instruments used for this test conform to the requirements set out above with respect to materials, dimensions, and scale errors. In cases where the instrument is provided with a calibration certificate issued by a recognized standardizing body, the instrument is classed as certified and the appropriate corrections listed shall be applied to the observed readings. Instruments which satisfy the requirements of this test method, but are not provided with a recognized calibration certificate, are classed as uncertified.

The density, relative density (specific gravity), or API gravity by the hydrometer method is most accurate at or near the reference temperature of 15°C. Below are formulas for converting the units:

$$T_{oF} = 32 + \frac{9}{5} \bullet t_{oC}$$

$$t_{oC} = \frac{5}{9} \bullet (T_{oF} - 32)$$

Use these or any other temperatures between -18 and +90°C, so far as it is consistent with the type of sample and necessary limiting conditions.

When the hydrometer value is to be used to select multipliers for correcting volumes to standard temperatures, the hydrometer reading should be made preferably at a temperature within ±3°C of the temperature at which the bulk volume of the oil was measured (Note 2). However, in cases when appreciable amounts of light fractions may be lost during determination at the bulk oil temperature, the limits given in Table 3 should be applied.

Volume and density (relative density (specific gravity), API gravity correction tables are based on an average expansion for a number of typical materials. Since the same coefficients were used in computing both sets of tables, corrections made over the same temperature interval minimize errors arising from possible differences between the coefficients of the material under test and the standard coefficients. This effect becomes more important as temperatures diverge significantly from 15°C.

Procedure

Adjust the temperature of the sample **(Warning—** Flammable. Vapor harmful). Bring the hydrometer cylinder (Note 4) and thermometer to approximately the same temperature as the sample to be tested. Transfer the sample to a clean hydrometer cylinder without

splashing, to avoid the formation of air bubbles, and to reduce to a minimum evaporation of the lower boiling constituents of more volatile samples. Transfer highly volatile samples to the cylinder by water displacement or by siphoning (Note 3). Remove any air bubbles formed, after they have collected on the surface of the sample, by touching them with a piece of clean filter paper before inserting the hydrometer.

Highly volatile samples containing alcohols or other water-soluble material should always be transferred by siphoning.

Place the cylinder containing the sample in a vertical position in a location free from air currents. Ensure that the temperature of the sample does not change appreciably during the time necessary to complete the test; during this period, the temperature of the surrounding medium should not change more than 2 °C. When testing at temperatures much above or below room temperature, a constant- temperature bath may be necessary to avoid excessive temperature changes.

Lower the hydrometer (Fig. 1) gently into the sample. Take care to avoid wetting the stem above the level to which it will be immersed in the liquid. Continuously stir the sample with the thermometer, taking care that the mercury thread is kept fully immersed and that the stem of the hydrometer is not wetted above the immersion level. As soon as a steady reading is obtained, record the temperature of the sample to the nearest 0.25°C and then remove the thermometer.

Depress the hydrometer about two scale divisions into the liquid, and then release it. The remainder of the stem of the hydrometer, which is above the level of the liquid, must be kept dry since unnecessary liquids on the stem affects the reading obtained. With samples of low viscosity, impart a slight spin to the hydrometer on releasing to assist in bringing it to rest, floating freely away from the walls of the cylinder. Allow sufficient time for the hydrometer to come to rest, and for all air bubbles to come to the surface. This is particularly necessary in the case of more viscous samples.

When the hydrometer has come to rest, floating freely away from the walls of the cylinder (Note 4), estimate the hydrometer scale reading to the nearest 0.0001 relative density (specific gravity) or density or 0.05° API. The correct hydrometer reading is that point on the hydrometer scale which the principal surface of the liquid cuts the scale. Determine this point by placing the eye slightly below the level of the liquid and slowly raising it until the surface, first seen as a distorted ellipse, appears to become a straight line cutting the hydrometer scale.

When using a plastic cylinder, dissipate any static charge Static charges often build up when using such cylinders and may prevent the hydrometer from floating freely.

With an opaque liquid take a reading by observing with the eye slightly above the plane of the surface of the liquid, the point on the hydrometer scale to which the sample rises. This reading, at the top of the meniscus requires correction since hydrometers are calibrated to be read at the principal surface of the liquid. The correction for the particular hydrometer in use may be determined observing the maximum height above the principal surface of the liquid to which oil rises on the hydrometer scale when the hydrometer in question is immersed in a transparent oil having a surface tension similar to that of the sample under test.

Alternatively, corrections as given in Table 1 may be applied.

Immediately after observing the hydrometer scale value, again cautiously stir the sample with the thermometer keeping the mercury thread fully immersed. Record the temperature of the sample to the nearest 0.2°C. Should this temperature differ from the previous reading by more than 0.5°C, repeat the hydrometer test and then thermometer observations until the temperature comes stable within 0.5°C.

After use at a temperature higher than 38 °C, allow all hydrometers of the lead shot in wax type to drain and cool in vertical position.

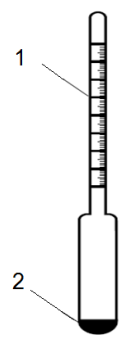

Fig. 1. Hydrometer

1 – density range, 2 – weight.

Density measurement

The sample is brought to the prescribed temperature and transferred to a cylinder at approximately the same temperature. The appropriate hydrometer is lowered into the sample and allowed to settle. After temperature equilibrium has been reached, the hydrometer scale is read, and the temperature of the sample is Noted. If necessary the cylinder and its contents may be placed in a constant temperature bath to avoid excessive temperature variation during the test.

Accurate determination of the density, relative density (specific gravity), or API gravity of petroleum and its products is necessary for the conversion of measured volumes to volumes at the standard temperatures of 15°C.

Density, relative density (specific gravity), or API gravity is a factor governing the quality of crude petroleum; crude petroleum prices are frequently posted against values in degrees API. However, this property of petroleum is an uncertain indication of its quality unless correlated with other properties.

The hydrometer method is most suitable for determining the density, relative density (specific gravity), or API gravity of mobile transparent liquids. It can also be used for viscous oils by allowing sufficient time for the hydrometer to reach equilibrium, or for opaque oils by employing a suitable meniscus correction.

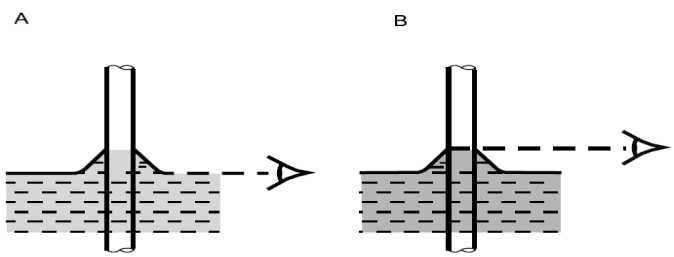

Fig.2. Method of reading product density by means of a hydrometer

A – for light products, B – for dark products

Apply any relevant corrections to the observed thermometer reading (for scale or bulb) and to the hydrometer reading (scale). For opaque samples, make the appropriate correction to the observed hydrometer reading. Record to the nearest 0.0001 density or relative density (specific gravity) or 0.1° API the final corrected hydrometer scale reading (Note 7). After application of any relevant corrections record to the nearest 0.5°C, the mean of the temperature values observed immediately before and after the final hydrometer reading.

Hydrometer scale readings at temperatures other than calibration temperatures (15°C) should not be considered as more than scale readings since the hydrometer bulb changes with temperature. To convert corrected values to standard temperature, use the Petroleum Measurement Tables.

The difference between two test results, obtained by the same operator with the same apparatus under constant operating conditions on identical test material, would in the long run, in the normal and correct operation of the test method, exceed the following values only in one case in twenty.

Literature

1. D1298 Test Method for Density, Relative Density (Specific Gravity), or API Gravity of Crude Petroleum and Liquid Petroleum Products by Hydrometer Method
2. *ASTM D4052 - 09 Standard Test Method for Density, Relative Density, and API Gravity of Liquids by Digital Density Meter*
3. ISO 3675:1998 Crude petroleum and liquid petroleum products -- Laboratory determination of density -- Hydrometer method
4. API MPMS 9.1 Manual of Petroleum Measurement Standards Chapter 9 - Density Determination Section 1 - Standard Test Method for Density, Relative Density (Specific Gravity), or API Gravity of Crude Petroleum and Liquid Petroleum Products by Hydrometer Method Density, Relative Density (Specific Gravity), or API Gravity of Crude Petroleum and Liquid Petroleum Products by Hydrometer Method
5. ASTM Designation: D 1298-99 (2005)

7. Determination of gum content in gasoline

The aim of the exercise is to determine the content of gums present in gasoline.

Introduction

The present gums constitute the residue after evaporation of fuel under the influence of air current in certain conditions. The amount of residue is an indicator of the amount of deposit that can be discharged during the operation of an engine with the use of a given fuel.

The intensity of deposit formation in the supply system and the combustion chamber depends on the amount of unsaturated and aromatic hydrocarbons in the fuel. The primary factor in evaluation of fuel tendency to create deposits is the gum content. Heavy hydrocarbons and oxygen compounds included in the gums that cannot evaporate in mixture with air become deposited on the walls of the fuel system components.

In the high temperature zone (valves, piston head, combustion chamber, etc.) deposits gradually burn out, leading to the formation of carbon deposits.

Gum content in fuel is also a measure of fuel resistance to oxidation – an increase in the gum content of gasoline negatively affects the condition of the engine.

Reactive impurities in the fuel and have tendency to oxidize and form viscous liquids and solids are called gum. It deteriorates the gasoline during the long period of storage at high ambient temperatures. Cracked gasolines form considerable amount of gum. A gasoline with high gum content will cause operating difficulties, such as sticking valves and piston rings, carbon deposits in the engine, gum deposits in the manifold, clogging of carburetor jets and lacquering (varnish appearing residue) of the valve stems, the cylinders and pistons. Sticking of the inlet valve and formation of gum deposits in the intake manifold reduce volumetric greatly.

The amount of gum increases with increased concentration of oxygen with the rise in temperature with exposure to sunlight and also on contact with catalytic surface of metals. In storing fuels, these factors should be kept in mind.

Inhibitors of gum deposits are almost invariably added to thermally cracked gasoline in order to ensure stability. Certain dyes can be added to colour the gasoline, and also to inhibit the formation of gum. Such inhibitors have preference for oxidization over gasoline and the activity of the inhibitor decreases. This fades the colour of the gasoline. Thus, the loss colour of the gasoline may be an indication of the age or exposure of the fuel to gum forming

conditions. Gasoline specifications therefore limit both the gum content of the fuel and its tendency to form gum during storage.

Instruments and apparatus

a) Bath (fig. 1).

b) Beakers with the capacity of 25 cm^3.

c) Graduated cylinders with the capacity of 25 or 50 cm^3

d) Flowmeter to measure air flow in the amount of up to 60 dm^3/h.

e) Mercurial thermometer with the measuring range of 0 to 250°C.

f) Source of compressed air.

g) Electric heater with resistor.

i) Tongs.

Fig. 1. View of the stand

Exercise procedure

Pour mineral oil into the bath to such a height that heated oil completely fills in the bath covered with lid. Insert in the lid opening a thermometer mounted in corked in such way that mercury container of the thermometer is located 40 - 50 mm away from the lid. Put the bath on the electric heater and heat the oil to the temperature of 150 ±3°C. Beakers washed with benzene (or an alcohol-benzene mixture, or acetone) insert for 15 minutes into the recesses in the bath lid, heated to the required temperature. Next, cool down the beakers

in the exsiccator within 30-40 min and weigh them with an accuracy of up to 0.0002 g. Repeat the drying of beakers until constant weight is obtained (the difference between successive weighings should not exceed 0.0004g).

Connect the end of the coil through the flowmeter and washer to the source of compressed air.

Measure out 25 cm^3 of gasoline each to two prepared beakers. Insert the beakers with gasoline into the recesses in the bath lid, heated to the required temperature. Put a three-way distributor on the middle end of the coil. The lower ends of the air inlet distributor should be located 30 ±5 mm from the surface of the examined product.

Next, turn on air inlet to both beakers, setting the initial flow rate at 25 ±5 dm^3/min. Over a period of 5 minutes gradually increase the rate of air flow from 55 ±5 dm^3/min, avoiding splashing of liquid. Maintain that speed throughout the determination process.

Determination should end when vapour is no longer emitted and there is dry or oily residue in the beakers that does not alter its volume.

After the end of evaporation continue supplying the air for 15 minutes, then close the inlet, cool down the beakers in the exsiccator within 30-40 min and weigh them with an accuracy of up to 0.0002 g. Next, put the beakers again in the bath and blow with air under the same conditions within 15 min., then cool and weigh the beakers. Repeat the procedure until constant weight is obtained (the difference between two successive weighings should not exceed 0.0004 g).

Calculate the gum content in mg per 100 cm^3 of fuel X acc. to the following formula:

$$x = (G_1 - G_2) \cdot \frac{100}{25} \text{ [mg/100cm}^3\text{]}$$

where:

G_1 — beaker mass with the residue, mg,

G_2 — mass of empty beaker, mg,

25 – volume of the examined product per one beaker, cm^3

Perform at least two parallel determinations. Determination of a product in one beaker is to be treated as one determination.

The difference between two parallel determinations should not exceed, in the presence of gums:

up 15 mg/100 cm^3 (inclusive) — 2 mg,

15 to 40 mg/100 cm^3 — 3 mg,

over 40 mg/100 cm^3 — 8 mg.

The final result shall be the arithmetic mean of the results of parallel determinations.
A product with the gum content up to 2 mg/100 cm^3 should be regarded as practically gum-free.

Literature

1. ASTM D381 - 09 Standard Test Method for Gum Content in Fuels by Jet Evaporation
2. http://www.petrotest.com/index_234509008c5d143f9240001c0a850101_en.html

8. Determination of flash and fire points of liquid fuels

The aim of the exercise is to discover the parameters of liquid fuels that impact the safety of their use through determination of the flash and fire points of diesel fuel and biodiesel by the Marcusson method in a device with an open crucible as well as their auto-ignition temperature with the dynamic method.

Introduction

In addition to determination of density and viscosity, the analysis of liquid fuels also covers determination of the flash point.

The flash point is stated primarily to determine the fire safety during fuel use. The flash point is characterized by a tendency to form flammable mixtures and is the value at which the heated product in mixture with air ignites upon contact with flame.

The flash point is the lowest temperature at which vapours of a product heated under standardized conditions create with the ambient air a mixture which ignites in the proximity of open flame. This temperature does not significantly affect the organization of the combustion process in power devices (boilers, furnaces, internal combustion engines), but it is of great importance for the safe use of liquid fuels due to the fire hazard. This concerns mainly the processes of treatment, storage, and transfer of liquid fuels. In addition, the flash point is used in the refining industry as an indicator of quality (purity) of petroleum fractions. The flash point of liquid fuel depends strongly on the boiling point of fuel; it is also affected by the viscosity, density, and chemical composition of fuel.

The fire point is defined as the lowest temperature at which vapours of the heated product under standardized conditions create with the ambient air a mixture which ignites in the proximity of open flame and burns for at least three seconds after the flame has been taken away. The fire point of liquid fuels is affected by similar factors as in the case the flash point, i.e. chemical composition, boiling point, and viscosity of fuel. We can distinguish two types of methods used to determine the flash point and the fire point:

1) methods in which the process of vapour diffusion to the environment is limited (using closed crucible), including the Abel-Pensky method and the Pensky-Martens method;

2) methods involving determination in an open crucible – the Marcusson method and the Brenken method.

In order to eliminate the influence of fuel heating speed and geometrical dimensions of the measurement system, the above methods have been standardized. However, when comparing or verifying the results of determinations, it must be taken into account that the flash point and the fire point depend to a large extend on the type of the determination method and are approx. 30 deg higher in the case of the open crucible method compared to the closed crucible method. The choice of a particular type of method depends on the flash point of fuel.

In order to ensure repeatability of the results of determination it is also important to appropriately prepare fuel samples. The method of preparation of a fuel sample is shown in table 1.

Tab.1. Methodology of sample preparation to determine the flash point

Fuel type	Procedure
Products containing water above 0.1%	Dehydrate by decantation or filtration
Petroleum product with the flash point under 80°C	Cool down to the temperature of 50°C below the expected flash point

Description of the stand

The stand, whose diagram is shown in Figure 1, consists of the Marcusson apparatus, comprising a metal vessel used as the casing, with the heating coil inside which there is a cylindrical steel melting pot with the internal diameter of 40 mm and the height of 40 mm. The crucible with the fuel sample is heated by a 400W electric heating coil which has a system for smooth adjustment of the heating power. The space between the crucible and the vessel is filled with sand bath in order to improve the uniformity of the heat flux. On the side of the vessel there is a diffuse gas burner supplied from the gas network, whose head can be rotated over the open crucible. There is also a measuring thermometer located over the crucible with the tested liquid fuel, with the adjustable depth of immersion in the tested fuel sample. The measuring instruments required to perform determination also include a set of measuring thermometers with the measuring ranges of 0-100°C and 100-260°C and a stopwatch. In addition, the used auxiliary instruments include tongs for pulling out hot crucible, a ceramic tile, and a set of syringes and pipettes to fill the crucible with a liquid fuel sample.

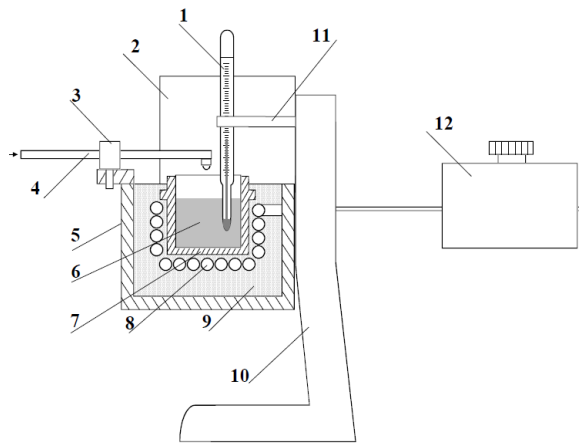

Fig.1. Diagram of a stand to determine the flash point and the fire point of liquid fuels by the Marcusson method.

1, measuring thermometer; 2, glare shield; 3, screw adjusting the height of the burner over the crucible; 4, gas burner with a valve; 5, casing; 6, liquid fuel sample; 7, melting pod; thermometer holder; 8, heating coil; 9, sand fill; 10, apparatus stand; 11, thermometer holder; 12, autotransformer

Fig.2. Stand to determine the flash point and the fire point of liquid fuels by the Marcusson method.

Measurement procedure

Prior to starting the proper designation of the flash and fire points, check the quality of the electricity and gas connections.

While doing the exercise observe the following steps:

1) in order to remove fuel and water residue, wash the melting pot with extraction naphtha and dry it;

2) prepare a sample of the fuel selected by the person in charge of the exercise according to the instructions collected in table 1;

3) using a pipette or syringe fill the melting pot with the required amount of fuel, i.e. to the level of the bottom line when examining products with the flash point of over 250°C and to the level of the top line for the remaining fuels;

4) insert the melting pot into the sand vessel so that the heating coil is encircled the total volume of the pot;

Please note – the temperature of the apparatus before the melting pot is put inside it should be lower by 33°C than the flash point. Cover the empty space around the melting pot with sand. Immerse a thermometer with the appropriate measuring range in the fuel sample. The thermometer should be located 5 mm away from the wall and 2 mm away from the melting pot bottom and should not impede the travel of the burner;

5) turn on the heating system and set the heating rate with the power control. During the initial phase (up to approx. 3°C below the expected flash point) the temperature should rise at a rate of approx. 6 ^{o}C /min.;

6) at a fuel temperature of approx. 3°C below the expected flash point, the amount of current flowing through the transformer should be reduced so that the temperature rises at a rate of 3 ^{o}C /min.;

7) ignite and regulate the burner so that the flame height is 10 mm;

8) test flammability by moving the burner over the open crucible. The flame should stay over the free surface of liquid for approx. 1 sec.;

9) repeat the flammability test every 1 deg of rise in fuel temperature;

10) the lowest read temperature, at which fuel vapours ignite from the flame and extinguish immediately after removal of the burner should be adopted as the flash point;

11) continue heating the sample by repeating the flammability test until the moment when fuel vapours igniting from the flame do not extinguish after removal of the burner. This is the fire point of liquid fuels;

12) take out the thermometer and extinguish the burning fuel sample;

13) turn off the electric heater power;

14) take out the melting pot with the tongs, put it away at the designated place, and when cooled pour the examined sample into a beaker;

15) read the value of the barometric pressure;

16) after the sand bath cools down to approx. 37 ^{o}C below the flash point of the examined fuel, repeat the steps describe in point 2-18 for the next fuel sample;

17) after completing all determinations make sure that the main supply valve of the natural gas has been shut off.

Processing of the results

The results of determinations of the flash point and the fire point of liquid fuels should be presented in the form of a protocol according to the following tables. If, when performing determination, atmospheric pressure differs from normal pressure (101.325 kPa) by more than 2 kPa, the results must be adjusted with the corrective amendment calculated according to the following formula:

$$\Delta T = 0.25(101.325 - p_{ot})$$

where:

ΔT – amendment taking into account the difference in ambient pressure during the determination, K

p_{ot} – ambient pressure during the determination, kPa

The end result shall be the arithmetical mean of the results of at least two determinations not differing by more than 6 ^{o}C. If the difference is higher than 10 ^{o}C carry out a third determination and accept as the end result the arithmetic mean of the results of the three determinations.

Tab.2. Summary of the obtained results

No	Examined fuel determination	Flash point °C	Fire point °C	Barometric pressure kPa

<u>Literature</u>

1. Harry A. Wray, American Society for Testing and Materials - 1992 - Technology & Engineering http://books.google.pl/books?id=p03ADKiGXdoC&pg=PA30&lpg=PA30&dq=flash+and+fire+points+of+liquid+fuels&source=bl&ots=B8i-JEhaWJ&sig=JN-XpRbMCnOa0QJuSbeSF_mCDFA&hl=pl&ei=VYs9TanVMYjDswbR3LXzBg&sa=

X&oi=book_result&ct=result&resnum=3&ved=0CCUQ6AEwAjgU#v=onepage&q=flash%20and%20fire%20points%20of%20liquid%20fuels&f=false

2. ASTM D92 - 05a(2010) Standard Test Method for Flash and Fire Points by Cleveland Open Cup Tester
3. http://etudesproject.org/nonfpdata/cog/FS442/DOC0021.htm
4. http://www.petrotest.com/petrotest_product_12-0940_en.pdf

9. Determination of kinematic viscosity by the Ubbelohde method

The aim of the exercise is to determine the kinematic viscosity of diesel fuel and rapeseed oil methyl ester

Introduction

Viscosity is the parameter characterizing resistance of flow posed by liquid during movement and is inversely proportional to the liquid fluidity (the greater the viscosity, the lower the fluidity). Therefore, viscosity determines the inner friction of liquid and is equivalent to the friction coefficient determined in moving solids. In the case of liquids the following are distinguished: dynamic viscosity, expressed in mPa (millipascal -seconds) and kinematic viscosity, expressed in mm^2/s or cSt (centistokes).

Most liquids are characterized by means of kinematic viscosity expressed as the ratio of dynamic viscosity of the liquid to its density under the same measurement conditions (temperature and pressure).

$$\gamma = \frac{\eta}{\rho}$$

where

γ – kinematic viscosity

η – dynamic viscosity

ρ – density

Unit: mm^2/s or cSt (centistokes); mm^2/s = 1 cSt

Viscosity of the diesel fuel determines the degree of fuel spray and the quality of its combustion. If it is too large, large drops are formed during the spraying. Fuels with insufficient viscosity also disrupt the process of mixture formation. During spraying fine droplets are formed which quickly lose speed. Then the stream of sprayed fuel fills only a part of the combustion chamber. There is a local excess of fuel and incomplete combustion in the part of the chamber that is close to the injector. The higher the fuel viscosity the more difficult it is for it to flow through the filters, pipes, and other elements of the supply system, which is reflected in the reduced power of the engine. Too low viscosity of fuel is also undesirable because fuel in compression-ignition engines acts as a lubricant for injection pump plungers. As a result of too low viscosity, the lubrication of those elements is insufficient, which leads to their faster wear.

Kinematic viscosity is mostly measured with capillary viscometer (Fig 1.). The test involves measurement of the flow time of liquid of a specified volume.

The conventional methods, which are generally simpler but less accurate, are represented by the Redwood instrument in the United Kingdom, Saybolt in the United States and Engler in Continental Europe. They each comprise a sample cup fitted with a standard-sized orifice in the base, and surrounded by a water jacket containing a heating device. When the temperature reaches the test level, the orifice is unsealed, and the time of flow determined for the given volume of sample. The result is reported as Redwood or Saybolt universal seconds, or as Engler degrees, given by the efflux-time ratio for the sample and for water. When the efflux time exceeds a specified maximum -- for example, 2000 s — due to high viscosity, use is made of a Redwood No. II, or a Saybolt instrument, incorporating a larger-diameter orifice.

The absolute determination of kinematic viscosity generally employs a glass U-tube viscometer with a capillary tube built into one leg. The length—diameter ratio is such that end effects are negligible, and the precision is therefore higher. The instrument is suspended vertically in a thermostatically controlled water bath, and the time measured for a given volume of sample to flow through the capillary. This measured time period is inserted into an equation to give a direct measure of the kinematic viscosity in centistokes

$$V = C - \frac{B}{t}$$

where

C- the instrument calibration constant,

B = the instrument type constant, depending on the capillary diameter,

t - efflux time in seconds

The operating range of efflux time is 120 to about 1500 seconds, and live different sizes of instrument are available, which together cover the overall range of viscosity from 0.5 to 1500 cSt.

In most commonly used methods the efflux time is based on the movement of the hailing meniscus of the sample. With opaque liquids that tend to adhere to the glass walls, it is more convenient to dryers the Flow direction and to time the movement of the kidding meniscus. As a means of maintaining the specs of flow, the basis design has been modified by applying atmospheric pressure to the base of the capillary lube so that, in such a suspended-level instrument, the sample does not have to flow against a rising back-pressure. Other instruments are designed for use with micro-sized samples.

A	B
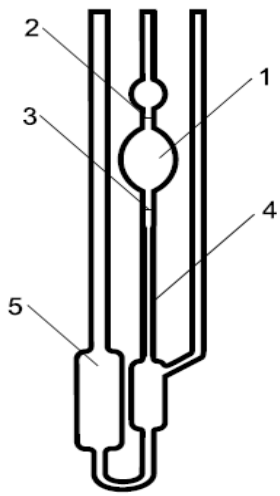	

Fig. 1. Ubbelohde viscometer

A 1 – measuring bulb for the examined product, 2, 3 – marks determining the level of the examined liquid before and after the measurement, 4 – calibrated capillary, 5 – bottom reservoir

B Photograph of the measuring bulb

Together, these instruments cover the overall viscosity range from 0.2 to 300 000 cSt. Many of the above features are incorporated into a newly designed instrument in which six of the nine tubes available are mounted semi-permanently in a thermostatic bath. Each tube consists of a single vertical capillary limb with a horizontal section at the top to serve as a constant-head device, and a calibrated bulb at the bottom.

A sample is introduced, and a timer is operated manually as the leading meniscus passes calibration marks at each end of the bulb. The time interval is then recalled from a memory store, and multiplied by the tube constant to give a direct indication of the viscosity in centistokes.

Viscosity of the diesel fuel determines the degree of fuel spraying and the quality of its combustion. If it is too large, large drops are formed during the spraying. Fuels with insufficient viscosity also disrupt the process of mixture formation. During spraying fine droplets are formed which quickly lose speed. Then the stream of sprayed fuel fills only a part of the combustion chamber. There is a local excess of fuel and incomplete combustion in the

part of the chamber that is close to the injector. The higher the fuel viscosity the more difficult it is for it to flow through the filters, pipes, and other elements of the supply system, which is reflected in the reduced power of the engine. Too low viscosity of fuel is also undesirable because fuel in compression-ignition engines acts as a lubricant for injection pump plungers. As a result of too low viscosity, the lubrication of those elements is insufficient, which leads to their faster wear.

Apparatus

- Ubbelohde viscometer
- thermostatic bath
- stopwatch

Measuring of kinematic viscosity

The designation involves measurement of the flow time of a specified volume of the examined liquid through the viscometer capillary, under the influence of gravitational forces, at a strictly defined temperature. The flow time should be no shorter than 200 sec. and no longer than 900 sec. In order to ensure constant temperature, the examined sample in the capillary should be kept in the thermostat at the measuring temperature.

Determination procedure

Introduce the examined liquid into a clean and dry viscometer through tube 1 in such way that when the device is set in vertical position the meniscus level of the liquid falls between the marks on the capillary. Put the viscometer in the thermostat for approx. 30 min., then, with the tube tightly closed with a finger, suck in the examined liquid to 1/2 of the height of the upper reservoir situated above the vessel for the examined product (photo B) – for this put a length of rubber tubing on the tube and connected it with the water pump. Next, disconnect the tube from the vacuum and open the tube held with a finger; when the liquid starts to flow down, measure the time it takes for the liquid meniscus to move from one mark to the other. Repeat measurements of the flow time of the sample until comparable results are obtained.

Results and calculations

On the basis of the performed determinations carried out at a temperature of $40^{o}C$ for the examined liquids calculate the kinematic viscosity according to the following formula:

$\nu = c \cdot \tau$

ν – kinematic viscosity, mm^2/s,

c – constant capillary, mm^2/s,

τ – arithmetic mean of the flow time of the examined product, s.

Literature

1. ASTM D445 - 10 Standard Test Method for Kinematic Viscosity of Transparent and Opaque Liquids (and Calculation of Dynamic Viscosity)
2. British Standards Institute BS ISO/TR 3666:1998 Viscosity of water
3. British Standards Institute BS 188:1977 Methods for Determination of the viscosity of liquids
4. ASTM International (ASTM D7042)
5. http://www.pra.org.uk/viscosityoils/notes-units.htm
6. http://www.kittiwake.com/appendix_1_viscosity_conversion_tables.htm Viscosity conversion tables

10. Determination of the fractional composition by distillation method at atmospheric pressure

The aim of the exercise is to determine the fractional composition of gasoline and diesel fuel by distillation method at atmospheric pressure

Fractional composition defines the relationship between temperature and participation in the product of the ingredients distilled off to that temperature under standardized conditions. The above relationship is specified by either determining the temperatures to which a specified % volume of the product is distilled, or by determining % volume of the product distilling to a specific temperature. The fractional composition may be treated as a function having one of the two following forms:

$$\%\frac{V}{V} = f(t) \text{ or } t = f(\%\frac{V}{V})$$

Fractional composition is very important indicator for evaluation of its operating characteristics. The temperature at the beginning of distillation and the percent of evaporation up to the temp. of 70 °C characterize its starting properties. The greater the content of light fractions the better the starting properties. The percentage of evaporation up to the temp. of 100°C allows the assessment of average evaporative power of fuel affecting the regularity of engine operation. Percent of evaporation up to the temp. of 180 °C and the temperature at the end of distillation show the quantity of heavy, hard-to-evaporate fractions, which negatively affect engine operation. Rising temperature at the end of distillation and an increase in the amount of heavy fractions are accompanied by increased consumption of fuel and increased wear of engine components. Determination of the characteristic points of distillation enables prediction of fuel behaviour during operation, i.e. the ease of starting the engine, the economy of fuel consumption, volatility of gasoline, and the propensity to self-ignition.

Fractional composition:

- affects the evaporation rate of fuel as well as the engine efficiency and power
- responsible for the starting characteristics of the engine (cold start)
- ease of starting the engine and the ability to create gas traps

- characterizes the contents of the heaviest ingredients with a higher boiling point, which affect fuel consumption and the tendency to form carbon deposits

Description of the method

Based on composition, vapour pressure, expected temperature at the beginning of distillation, expected temperature at the end of distillation, or a combination of the above parameters, the sample is assigned to one of the product groups shown in table 1 for which the parameters of the distillation process have been standardized, the configuration of the distillation set itself, and the temperature of the cooling bath.

Table 1. Conditions during the determination of the fractional composition by distillation method

Typical sample type	Gasoline	Diesel fuel
Cooling bath temperature, ^{o}C	0-4	0-60
Ambient temperature of the receptacle, ^{o}C	13-18	
Time from turning on heating to IBP, min.	5-10	5-15
Time from IBP to the acquisition of: 5 % (V/V) distillate, s 10 % (V/V) distillate, s	 60-100 -	 - -
Equal average speed from 5 % (V/V) distillate to 5 cm^3 of the residue in the flask, ml/min	4-5	4-5
Time from 5 cm^3 of the residue in the flask to FBP, min.	≤5	≤5

IBP (initial boiling point) and FBP (final boiling point) – temperatures at the start and end of distillation

The sample with the volume of 100 cm^3 is subjected to distillation, which is carried out at atmospheric pressure. During the distillation the temperature of the vapors and the volume of the obtained distillate are regularly recorded. The volume of the undistilled product portion and the losses arising during the distillation are also recorded.

After the end of distillation the recorded vapour temperature values can be adjusted taking into account the differences between the atmospheric pressure during the performance of the test and the standard value of atmospheric pressure (760 mm Hg = 101.3 kPa).

The test results should be presented as a percentage of the evaporated or collected product as a function of read vapour temperature in the tabular or graphical form.

Exercise procedure

Apparatus

The basic components of the distillation set are as follows:

- ✓ distillation flask
- ✓ condenser with a cooling jacket
- ✓ heat source
- ✓ mercurial or electronic thermometer
- ✓ graduated receptacle

Preparation of the set and the sample

1. Record the current atmospheric pressure.

2. Measure out exactly 100 cm^3 of the sample, then carefully pour the measured out volume into a distillation flask, making sure that the sample does not get to the side tube of the flask.

3. Throw a few boiling chips into the flask. Do not dry or wipe the receptacle!

4. Attach the thermometer in the neck of the flask paying attention to the centric setting and correct position of the mercury reservoir (Fig. below).

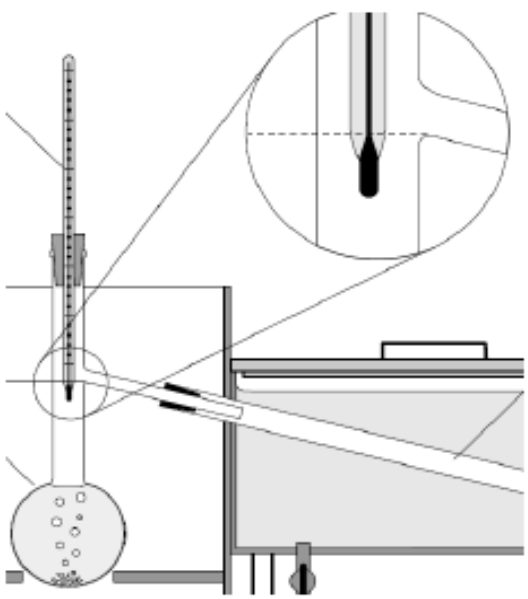

Fig. 1. Thermometer location in the flask in determination of distillation

Fig 2. View of the apparatus for determining the fractional composition by distillation method at atmospheric pressure.

5. Install the flask in the distillation apparatus
6. Put the receptacle under the condenser outlet.

Make sure that the thermometer is placed centrally in the neck of the distillation flask and the end of the mercury reservoir is at the same height, at which the side tube of the flask starts.

Determination of the temperature at the start of the distillation (IBP)

Record the starting time of heating the sample. The time from the moment of turning on the heating to the appearance of the first distillate drop must be in the range of: 5 - 10 min. (for gasoline), or 5-15 min. (for diesel fuel).

Distillation procedure

1. The intensity of heating should be regulated continuously, so that the distillation rate is 4 – 5 cm^3/min.
2. During the distillation record the temperatures corresponding to the following volumes of the collected distillate: **5, 10, 15, 20, 30, 40, 50, 60, 70, 80, 85, 90, and 95 % (V/V)**
3. Record the highest temperature observed during the distillation (*FBP*).
4. If possible, record the temperature corresponding to the moment of evaporation of the last drop of the sample from the bottom of the distillation flask (*dry point*).
5. After turning off the heating wait until the entire condenser contents flows down to the receptacle.

6. When the flask cools down, pour the remaining content to the appropriately graduated, dry, and clean measuring cylinder (5cm^3). The distillation flask should be put upside down over the cylinder so that its content can trickle down into the cylinder.

If the cylinder has no scale under 1 cm^3 and the volume of the remaining substance is less than 1 cm^3, first add to the cylinder 1 cm^3 of heavy mineral oil to facilitate reading the volume of the remaining substance.

Result

On the basis of the performed determinations prepare a distillation curve of the examined fuel and specify characteristic values of the fractional composition, which are defined in the relevant standard for the examined fuel.

<u>Literature</u>

1. James G . Speight, The Chemistry and Technology of Petroleum, Fourth Edition CRC Press 2007 (http://www.crcnetbase.com/doi/abs/10.1201/9781420008388.ch8)
2. http://www.the-crankshaft.info/2009/09/automobile-fuels.html

11. Calculation of cetane index of middle-distilate fuels by the four-variable equation

The aim of the exercise is to determine the cetane index of biodiesel and diesel fuel

The cetane number is a measure of fuel ability to self-ignite compressed fuel/air mixture. The cetane number affects the ease of cold starting the engine, emissions of exhaust gases, and 'loud' burning of fuel in the cylinder. The higher the CN of a given fuel, the better its ability to self-ignite and the more efficient and regular is the course of its combustion process. Cetane, which is characterized by a short time of self-ignition delay, has the adopted CN =100. The CN value of fuels is closely linked to their chemical structure. The biggest cetane numbers belong to paraffin hydrocarbons with a large number of carbon atoms and long, straight chains. The smallest cetane numbers belong to aromatic hydrocarbons.

The cetane index (CI) is used to estimate the cetane number of diesel fuels if a research engine is unavailable to determine that property or if the amount of sample is insufficient to perform the engine test.

Scope

In this method, a method of cetane index determination of middle-distilate petroleum derived fuels has been described. Calculated value prescribed as "cetane index calculated by the four-variable equation".

This standard can not be adapted to determinate neither cetane number increasing fuel additives, pure hydrocarbons nor coal derived fuel distilate. This standard can be employed to fuel containing non-petroleum additives or bituminous derived fuels.

Recommended scope of the fuel properties:

Cetane number	32.5-56.5
Density in temperature 15^0C, kg/m^3	805.0-895.0
10% (v/v) distillates to temperature, ^{o}C	171-259
50% (v/v) distillates to temperature, ^{o}C	212-308
90% (v/v) distillates to temperature, ^{o}C	251-363

Predicted deviation of cetane number in the recommended scope (32.5-56.5) in four-variable equation method is less than +/- 2 units of cetane number of 65% tested distilates.

Density in temperature 15^oC and 10% (v/v), 50% (v/v), 90% (v/v) distillates to temperatures are determinate according to proper standard methods.

Procedure

Designate density of the sample i the temperature of 15°C, with precision of 0,1 kg/m^3 according to ISO 3675 or ISO 12185 method with ISO 91-1 adjustment if necessary.

Designate 10% (v/v), 50% (v/v), 90% (v/v) distillates to temperatures of the sample, with precision of 1^{0}C with adjustment of atmospheric pressure according to ISO 3405 method.

Calculations

Place the measured values to the equation below to calculate cetane index:

$IC= 45.2 + 0.0892T_{10N} + (0.131 + 0.901B)\ T_{50N} + (0.0523 – 0.42B)\ T_{90N} + 0.00049(T^2_{\ 10N} – T^2_{\ 90N}) + 107B + 60B^2$

where:

T_{10N}- $T_{10} – 215$

T_{50N}- $T_{50} – 260$

T_{90N}- $T_{90} – 310$

T_{10}- 10% (v/v) distillates to temperature, ^{o}C

T_{50}- 50% (v/v) distillates to temperature, ^{o}C

T_{90}- 90% (v/v) distillates to temperature, ^{o}C

$B = [\exp(-0.0035D_N)-1]$

D_N- D-850

D- Density in temperature 15°C, kg/m^3

Expression of results

Report the cetane index value with precision of 0,1 as the cetane index value calculated by the four-variable equation. Calculation of cetane index by determined Density in temperature 15°C and 10%, 50%, 90% (v/v) distillates to temperatures is precise.

Test report

The test report should contain at least the following information's:

a) a reference to this International Standard;

b) the type and complete identification of the product tested;

c) the results of the test;

d) all deviations of this procedure;

e) date of the test.

<u>Literature</u>

1. http://www.epa.gov/nvfel/testproc/121.pdf
2. Designation: D 976 – 04b An American National Standard Test Method for Calculated Cetane Index of Distillate Fuels1

12. Obtaining of methyl ester (Biodiesel) from rapeseed oil: Transesterification Process using Microwave Irradiation

The aim of the exercise is fatty acid methyl ester synthesis from rapeseed oil over homogenous catalysts in presence of microwave.

Introduction

- ***Biodiesel*** is a fuel consisting of alkyl -usually methyl or ethyl- esters and can be used similarly to diesel fuel such as in diesel engines. Biodiesel recipe specifies a quantity of every ingredient required, and the steps for combining and processing them to make biodiesel fuel
- ***Vegetable oil*** or vegoil is fat extracted from plant sources, known as oil plants. Although in principle other parts of plants may yield oil, in practice seeds form the almost exclusive source.
- ***Rapeseed*** is very widely cultivated throughout the world for the production of animal feed, vegetable oil for human consumption, and biodiesel; leading producers include the European Union, Canada, the United States, Australia, China and India. Rapeseed oil is used in the manufacture of biodiesel for powering motor vehicles.
- ***Fatty acid*** important component of lipids (fat-soluble components of living cells) in plants, animals, and microorganisms. Generally, a fatty acid consists of a straight chain of an even number of carbon atoms, with hydrogen atoms along the length of the chain and at one end of the chain and a carboxyl group (─COOH) at the other end.
- ***Ester*** any of a class of organic compounds that react with water to produce alcohols and organic or inorganic acids. Esters derived from carboxylic acids are the most common. Carboxylic acid esters, formula RCOOR` (R and R` are any organic combining groups), are commonly prepared by reaction of carboxylic acids and alcohols in the presence of hydrochloric acid.
- ***Extraction*** takes advantage of the relative solubilities of solutes in immiscible solvents. If the solutes are in an aqueous solution, an organic solvent that is immiscible with water is added. The solutes will dissolve either in the water or in the organic solvent. If the relative solubilities of the solutes differ in the two solvents, a partial separation occurs.
- ***Microwave irradiation*** electromagnetic radiation having a frequency within the range of 1 gigahertz to 1 terahertz (10^9–10^{12} cycles per second) and a wavelength between 1 mm and 1 m.

➢ ***Transesterification*** is a process of displacement of an alcohol group from an ester by another alcohol.

Biodiesel was introduced in South Africa before World War II to power heavy-duty vehicles. Recent environmental and domestic economic concerns have prompted resurgence in the use of biodiesel throughout the world. Across the globe environmental concerns and energy security issues have prompted legislation and regulatory actions spurring demand for alternative fuels such as biodiesel. However, the greatest driving force for the use of biodiesel and biodiesel blends is the need to have a fuel that fulfils all of the environmental and energy security needs which does not sacrifice operating performance. Biodiesel possesses several distinct advantages over petro-diesel in the following safety, biodegradability and environmental aspects:

✓ A renewable fuel with a net gain of energy producing it;

✓ Higher flash point makes its safer in transport and storage

✓ Greatly reduces particulate matter and carbon monoxide emissions

✓ Reduces carcinogenic polycyclic aromatic hydrocarbons (PAH) and nitrated PAH;

✓ Contains essentially no sulphur, therefore greatly reduces sulphur dioxide emissions from diesel vehicles;

✓ Biodegrades as fast as dextrose;

Numerous studies have been conducted on biodiesel production and emission testing in the past two decades. Most of the current challenges are targeted to reduce its production cost, as the cost of biodiesel is still higher than its petro-diesel counterpart. This opens a golden opportunity for the use of rapeseed oils as its production feedstock.

Transesterification

Biodiesel can be produced through "transesterification"; a process that combines vegetable oils, animal fats, and/or microalgal oils with alcohol in the presence of a catalyst to form fatty esters. Products are separated into phases which provide easy removal of glycerol, a valuable industrial by-product, in the first phase. The remaining alcohol/ester mixture is then separated and the excess alcohol is recycled. Then the esters are sent to the clean-up or purification processes, which consist of water washing, vacuum drying, and filtration.

Transesterification is a process of displacement of an alcohol group from an ester by another alcohol. In vegetable oil almost 90–95% is glycerides, which are basically esters of glycerol and fatty acids. Previous publications reported the use of methyl, ethyl, and butyl alcohols for the transesterification of rape oil, sunflower oil, cotton seed oil, peanut oil, soybean oil, and

palm oil to produce methyl, ethyl, and butyl esters. The transesterifications were enhanced by the use of potassium hydroxide, sodium hydroxide, sodium methoxide, or sodium ethoxide as catalysts. Important reaction parameters for the transesterifications are: ratio of alcohol to vegetable oil, temperature, rate of agitation, amount of water present in reaction mixture.

Methanol can be use to produce methyl ester of vegetable oils. Although use of different alcohols present few differences with regards to the kinetics of reaction, the final yield of esters remains more or less unchanged. Therefore, selection of the alcohol is based on cost and performance consideration.

The manufacturing of methyl esters from rapeseed oil and alcohol is depend of: temperature of reaction, catalyst, rate of agitation of reaction mixture, water content of alcohol (ethanol) and amount of excess alcohol.

Experimental

The most common recipe uses waste vegetable oil (WVO), alcohol (methanol or ethanol) and sodium hydroxide (caustic soda), to produce biodiesel and glycerol. To produce 1 t of biodiesel: one needs 1 t of biolipids (animal or vegetable oil) and 0.1 t of methanol, one receives 0.1 t of glycerol.

The most common steps are:

1. Preparation: cleaning/heating biolipid (i.e. WVO). With wet oil, you will obtain soap with the biodiesel, the conversion index from vegetable oil to biodiesel will be smaller and you will obtain an excess of triglycerides.
2. Titration of WVO sample. Optimal pH for Biodiesel is 7 (neutral), the same as distilled water (and most tap water). Some fat has a high level of free fatty acids which require an acid esterification (to obtain an pH lower than 3) before the alkaline transesterification.
3. Mixing the bioalcohol (methanol or ethanol) and catalyst (sodium hydroxide) in exact amounts
4. Combining at 50ºC methanol/caustic with the biolipids.
5. Separation:
   - Of biodiesel and glycerol (by decantation, centrifugation...).
   - Removing of alcohol (by distillation).
6. Biodiesel purification: separation from the biodiesel of the wastes (catalyst and soap): washing and drying the biodiesel.
7. Disposing of the wastes.

There are three basic routes to biodiesel production from biolipids (biological oils and fats):

- Base catalyzed transesterification of the biolipid.
- Direct acid catalyzed transesterification of the biolipid.
- Conversion of the biolipid to its fatty acids and then to biodiesel.

Almost all biodiesel is produced using base catalyzed transesterification as it is the most economical process requiring only low temperatures and pressures and producing a 98% conversion yield. For this reason only this process will be described below.

Transesterification is crucial for producing biodiesel from biolipids. The transesterification process is the reaction of a triglyceride (fat/oil) with an bioalcohol to form esters and glycerol.

Oil preparation

Biodiesel processor machines need the vegetable oil to have some specific properties:

- Suspended particles lower than 1% (mass/mass) and than 5 micrometers. Because of this, the following are necessary: filtration to 5 micrometers, washing with hot water, decantation, heating of the oil, second decantation.
  - Anhydrous (waterless). Because of this, the final step of preparation, after the second decantation is drying.
  - Easy solubility in the alcohol to use.

Reaction:

$$\begin{array}{l} CH_2COOR1 \\ | \\ CHCOOR1 \\ | \\ CH_2COOR1 \end{array} + 3\ CH_3OH \leftrightarrow (CH_2OH)_2CH\text{-}OH + 3\ CH_3COO\text{-}R1$$

triglyceride + methanol ↔ glycerol + esters; R1, R2, R3 : Alkyl group.

During the esterification process, the triglyceride is reacted with alcohol in the presence of a catalyst, usually a strong alkaline (NaOH, KOH or sodium silicate). The main reason for doing a titration to produce biodiesel, is to find out how much alkaline is needed to insure a complete transesterification. Empirically 6.25 g / l NaOH produces a very usable fuel. One uses about 6g NaOH when the WVO is light in colour and about 7g NaOH when it is dark in colour. The alcohol reacts with the fatty acids to form the mono-alkyl ester (or biodiesel) and crude glycerol. The reaction between the biolipid (fat or oil) and the alcohol is a reversible reaction so the alcohol must be added in excess to drive the reaction towards the right and ensure complete conversion.

Procedure

Equipment:

1. 3 beakers V=250 cm^3;
2. Separating funnel V=250 cm^3;
3. Funnel;
4. Thermometer;
5. Analytic balance;
6. Magnetic stirrer;
7. Electric pump;
8. Microwave reactor.

Reagents:

1. Refined rapeseed oil;
2. Methyl alcohol;
3. Potassium hydroxide;
4. Litmus paper.

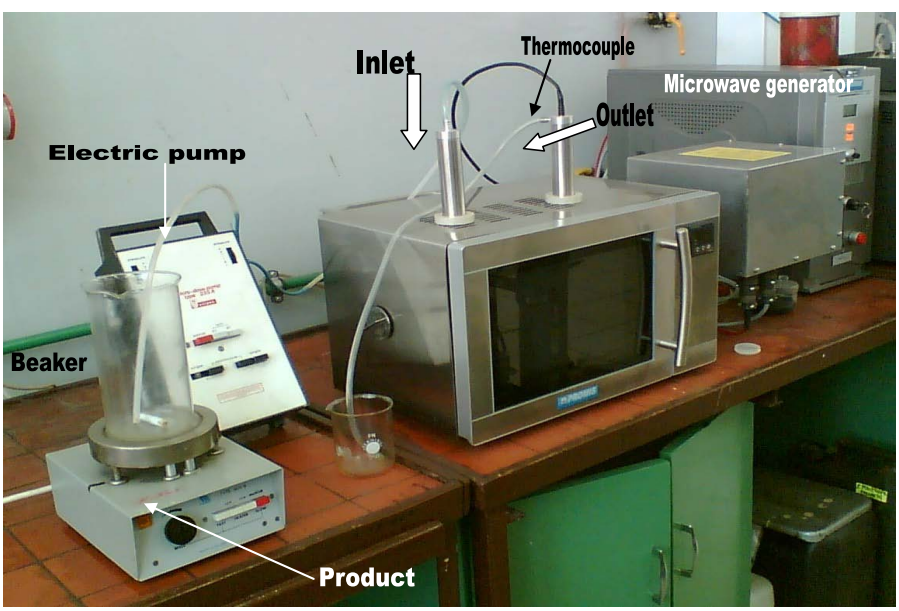

Fig.1. set for manufacturing methyl ester

Fig. 2. View of magnetic stirrer

Catalyst preparation:

Pour 38.4g (1.2M) of methanol and add 5g 85% KOH to first baker V=250 ml and mix on magnetic stirrer to total dissolution of KOH (Fig.2).

Reaction: CH_3 OH + KOH → CH_3OK + H_2O

Pour 186g (0.2M) of rapeseed oil to baker with catalyst and mix on magnetic stirrer. When reagents mixed, start dose the mixture to microwave reactor using electric pump (flow = 0.769 cm^3/s) (Fig.1). Set microwave reactor temperature on 45°C (Fig.3).

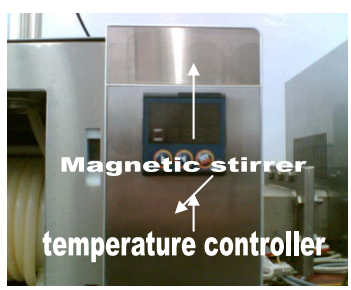

Fig. 3. View of temperature controller

Turn on the microwave generator (green switch) when first dose of reagents flowed to main reactor (Fig. 4).

Product (methyl ester and pollutants) pick up in second baker V= 250 cm^3. Pour mixture to separating funnel V=250 cm^3 and leave for 10 minutes. Upper layer: methyl esters – FAME; lower layer: glycerine (soap), water. Separate upper layer to third baker V=250 cm^3, than wash the whole 3 times water (30 cm^3) by shaking in separating funnel to neutral pH (use litmus paper).

Fig. 4. View of microwave controller

Leave mixture for 30 minutes, separate upper layer to baker and dry it using waterless sodium sulphate. Filtrate product on filter paper.

Check product purity by measuring density, viscosity and ignition temperature.

Literature

1. http://www.microwave-rf.org/MWRFApplKaddouri.pdf
2. Jerzy Walendziewski, Marek Kułażyński, Franciszek Czechowski, *VENICE 2010, Third International Symposium on Energy from Biomass and Waste, Venice, Italy, 8-11 November 2010.* Cisa Publisher, cop. 2010
3. Zbigniew J Sroka, Marek Kułażyński, Anna Zabłocka *Polish Journal of Environmental Studies.* 2009, vol. 18, no 1B, 216-219.

13. Determination of ash content

The aim of the exercise is to determine the ash content of diesel fuel and biodiesel.

Introduction

Apart from carbon deposits, fuel combustion may also result in the formation of ash. Formation of ash is determined by the presence of inorganic compounds in fuel: accidental mineral contaminants or soluble soups coming from the process of neutralization of organic acids with alkalis. Most ash passes through the combustion chamber without causing adverse effects but some ash builds up in the combustion chamber.

Ash content is determined by burning a weighed quantity of the examined product in a crucible of exactly known mass in such way that the products of combustion and calcinations are free of charred parts. Ash obtained that way is weighed. Ash content is expressed in % (m/m), in relation to the mass of the product collected for analysis.

Oxide ash – this is the residue after burning the product in air, followed by heating in furnace, at a given temperature, expressed as a mass fraction.

In the case of heavy fuels (heating oils and diesel fuels) nickel and vanadium compounds are considered to be very harmful. They cause the so-called high-temperature corrosion of combustion chambers and exhaust systems of engines and furnaces. Nickel, vanadium, and iron compounds come from crude petroleum, where they are present in the form of complex compounds, the so-called porphyrins.

Iron and zinc compounds may also come from internal, rusty surfaces of fittings and containers. Some pipelines haven internal zinc coverings.

Aluminum and silica constitute pollutants coming from solid impurities accompanying crude petroleum (aluminosilicates and sand) as well as from secondary pollutants entering the products in the storage and distribution processes.

Magnesium and calcium compounds, except when they are introduced to the composition of additives, may constitute product contamination with oils containing additives in the form of compounds of those metals.

Exercise procedure

Determination involves burning of a given product through a wick of ashless filter paper and ignition of the residue at a temperature of 600 ±50°C to constant weight.

Instruments and materials

- Porcelain crucibles or quartz crucibles and evaporating dishes with the dimensions of porcelain crucibles and evaporating dishes. Platinum crucibles or evaporating dishes are allowed.
- Electric plate or sand bath.
- An electric muffle furnace or a gas stove ensuring heating and maintenance of constant temperature of 600°C with an accuracy of 50° C. A thermocouple with millivoltmeter with the measuring range of up to 1000°C or another instrument ensuring measurement of temperature in that range.
- Exsiccator.
- Crucible tongs.
- Thermometer.
- Ashless filter with the diameter of 90 mm.
- Analytically pure hydrochloric acid, 10-percent aqueous solution.

If muffle furnace and thermocouple are used, it is recommended that the thermocouple is placed in the hole of the rear furnace wall so that its tip is located 10-20 mm away from the bottom of the furnace in the central zone maintaining constant temperature of 600 ±50°C.

Preparation of crucibles or evaporating dishes

Platinum, quartz, or porcelain crucibles or evaporating dishes should be heated to constant weight. For this purpose, first fill crucibles or evaporating dishes with diluted hydrochloric acid, then heat up so that the acid boils for several minutes. Next, pour out acid, wash with distilled water, dry, and heat in muffle furnace at a temperature of 600 ±50°C over a period of 30 min. Next, cool them on the air within 5 min. and put into an exsiccator. After 60 min. weigh the crucibles or evaporating dishes with an accuracy of up to 0.0002 g.

Repeat heating, cooling, and weighing until the difference between two successive weighings is equal or less than 0.0004 g

Porcelain crucibles and evaporating dishes can be used for as long as the glaze on the walls remains intact.

Mix the sample by shaking for 5 minutes in a bottle filled to 3/4 of its capacity. Put the ashless filter in the heated and weighed crucible or evaporating dish so that it tightly adheres to the crucible bottom and walls. Weigh the crucible with the filter with an accuracy of up to 0.01 g, then weigh out approx. 25 g of the examined product with the same accuracy. Next, ignite the filter and carry out mineralization of the sample in a muffle furnace at a temperature of 600 ±50°C. The time of mineralization ranges from 1.5 to 2 hours.

After mineralization transfer the crucible to the exsiccator for approx. 60 minutes. Then weigh with the accuracy of up to o.0002 g. Heating, cooling, and weighing should be repeated until the difference between two successive weighings is no grater than 0.0004 g.

The adopted results should the arithmetic mean calculated acc. to the following formula:

$$X = \frac{m_1 - (m_2 + m_3)}{m} \cdot 100 \text{ [\% m/m]}$$

where:

m – weighted amount of the sample (g.)

m_1- crucible weight with ash (g.)

m_2 crucible weight (g.)

m_3 – weight of ash of the filter used in determination (g.)

Literature

1. ASTM D482 - IP 4 - ISO 6245 - Ash from Petroleum Products
2. ASTM D874 - IP 163 - ISO 3987 - Sulphated Ash from Lubricating Oils and Additives

14. Determination of the corrosive effect of petroleum products on metals

The aim of the exercise is to determine the corrosive effect of gasoline, diesel fuel, and biodiesel on metals with the method of copper strip corrosion.

Introduction

The method is used to examine the corrosive effect on copper of aviation gasoline, fuels for aviation turbine engines, gasoline for motor-car engines, and hydrocarbon solvents with the vapor pressure higher than 124.1 kPa as well as kerosene, diesel fuels, heating oils, and other petroleum products. Hydrocarbons which make up fuel do not have a corrosive effect on metals. Corrosion of metals is caused by other types of chemical compounds presented in fuel, i.e.: sulphur compounds, organic acids, inorganic acids and bases, water-soluble. The most corrosive action is demonstrated by active sulphur compounds (e.g. free sulphur, hydrogen sulphide), particularly in the presence of water.

The presence of each of the corrosive factors is unacceptable over a certain, relatively low concentration. The presence of active sulphur compounds is identified by performance of copper strip corrosion.

Corrosion product form residue which enters the fuel supply system and disrupts its operation; the sediment also clogs the fuel filters.

Description of the determination

Determination involves immersion of a copper plate in the examined product of a specific volume at specific conditions of time and temperature, followed by assessment of the changes arising on plate surfaces by comparison with the standards of corrosion.

Instruments

- ✓ Glass tube with an external diameter of approx. 24 mm and a height of 150 mm.
- ✓ Bath with water or other liquid, enabling maintenance of a temperature of 40°C or 100°C with an accuracy of up to ±1°C.
- ✓ Holders of any type to place metal tiles during their polishing
- ✓ Flat glass tube to store copper plates after test and protect them during observation
- ✓ Thermometers enabling measurements of temperature of 40, 50, and 100°C with an accuracy of up to ±1°C with the scale interval no greater than 1°C

- ✓ Air reflux condenser with a diameter of 5-7 mm and a height of at least 280 mm, with a rubber stopper adjusted to the tube diameter and resistant to gasoline.
- ✓ Copper plates (features of MO or M1), measuring 20-22 x 50-55 x 3-4 mm. The plates can be used several times provided that the surfaces are not deformed and are free of corrosion point or deep pits or scratches that cannot be removed by grinding.
- ✓ Corrosion patterns, offering full reproduction of colours on copper plates, showing a typical, gradual increase in tarnish and corrosion.
- ✓ Tweezers.
- ✓ Rectified ethyl alcohol 95%.
- ✓ Benzene (pure).
- ✓ Mixture of ethyl alcohol and benzene (1+4).

Preparation of samples.

Collect a sample of the tested product into a clean, dark glass or plastic bottle or into another container that does not affect the corrosive effect of the examined product; tightly close the vessel with the sample. The product should not be filtered. Protect the sample against exposure to direct, o even scattered, light.

Exercise procedure

The plates should be cleaned with abrasive paper and washed first with an alcohol/benzene mixture, and then with alcohol-moistened cotton. Next, they should be washed with distilled water of room temperature. The entire surface of the plates should become covered with water film for a period of at least 30 sec. Otherwise, repeat washing with alcohol/benzene mixture and water moistened with alcohol and again wash with water. Plates should be washed directly prior to performance of examination. Immerse the plates prepared in the above way in ethyl alcohol and then dry with a stream of hot air or in a drier.

Pour the examined fuel into the tube with the plates. Put a condenser on the tube and heat the tube contents on a water bath with the temperature of 50 ±2°C for a period of 3 hours. After completion of the test take the plate out of the tube with tweezers, place it in porcelain evaporating dish and wash with alcohol/benzene mixture heated to 40°C. Next, carefully examine the surface of the plate with naked eye.

Perform at least three determinations.

Assessment of the results.

It should be recognized that fuel withstands examination if on large areas of the plates, at a distance of at least 1 mm from the edge, there are no signs of corrosion visible to the naked eye, such as stains or points in the colours:

black, dark brown, or steel-gray.

If corrosion signs are visible on just one plate, repeat the test. If, during the re-examination, signs of corrosion appear on at least one plate, it should be recognized that the fuel cannot withstand the test.

Literature

1. ASTM D7095 - 04(2009) Standard Test Method for Rapid Determination of Corrosiveness to Copper from Petroleum Products Using a Disposable Copper Foil Strip
2. http://palmoilis.mpob.gov.my/publications/TOT/TS-66.pdf

15. Analysis of gas composition by means of a gas chromatography

The aim of the exercise is to become acquainted with the methodology of determination of liquefied petroleum gas composition using a chromatograph.

Introduction

Gas chromatography is an analytical chromatographic technique that enables percent determination of the composition of mixtures of chemical compounds. Gas chromatography is the most common method for rapid analysis of complex mixtures of chemicals and assessment of the purity of such compounds.

The method is based on separation of mixtures on long and thin columns with a suitable solid or gel fill, followed by detection of concentration of the successively exiting compounds at the column outlet. The separation mechanism is based on the presence of intermolecular forces between compounds of the separated mixtures and the column fill. Those forces inhibit the flow of chemicals through the column. The stronger they are, they longer the time of transition of a chemical through the column. The time of transition of a given chemical through the whole column is called its retention. In the case of an appropriately long and thin column the retention times of compounds are sufficiently different that they exit the column separately, with the whole volume of compound existing in a relatively short period of time.

A sample of the analyzed mixture is injected into the so-called evaporating dish, where the temperature is high enough to make all its components pass into the gaseous state. Next, the samples is entrained by carrier gas and directed to the column. At the end of the column there is a detector that measures the concentration of compounds in carrier gas, which exit the column.

The samples analyzed by the gas chromatography method must be volatile and must not degrade at elevated temperature. An advantage of gas chromatography is the ability to use a very small sample of the analyzed substance.

A gas chromatographer consists generally of the following basic elements:

1. Injection system
2. Thermostatic furnace
3. Chromatographic column
4. Detector

5. Recorder

A traditional injection system usually consists of a membrane, which is punctured with a special chromatographic syringe, and an evaporating dish, where all components of the analyzed samples are evaporated. Injections are performed manually or automatically. A manual injection can be made with a special syringe. Automatic injections are performed using an autosampler or an *headspace* type auto sampler.

The most important part of the injection system is the dispenser system, which receives the sample collected by an autosampler or a syringe. We can distinguish the following dispensers: *split* type and *on-column* type. In the *split* type dispenser the sample collected for injection is divided by dividing the stream of gas reaching the column. The *on-column* dispenser is the dispenser where the entire sample immediately reaches the column. In the case of capillary columns the *split* type dispensers are most commonly used.

The furnace in the gas chromatograph is a sealed, high-performance heater isolated from the surroundings, with very precise temperature control. Inside the furnace there is a looped column. In order to enable quick change of temperature in time, they are usually provided with forced air flow. Most modern chromatographers support linear temperature change during the measurement, so analyses can be performed in the so-called gradient to increase their speed. However, sometimes analyses are conducted in the so-called isotherm, i.e. a constant, strictly defined temperature.

There are three kinds of chromatographic columns:

- ✓ Traditional columns with solid fill – these are columns with a length of 1-5 m and an internal diameter of approx. 2-3 mm, made of special alloys of non-ferrous metals. They are filled with porous solids, such as mica, crushed brick, and various xerogels. Separation of analyzed substances takes place inside them at the gas-solid boundary.
- ✓ Traditional columns with solid and liquid fill – these are columns of similar length and diameter as the columns for solid fill. However, they are filled with special porous xerogels (typically silica gels), which prior to filling-in are soaked with solutions of polymers or other non-volatile liquid substances of high viscosity. Separation of analyzed substances takes place inside them at the gas-liquid boundary.
- ✓ Capillary columns – these are columns with a length of up to 20-30 m and the internal diameter of the order of 0.1 mm or less. They are made of special grades of glass and look like fiber optical cables. They are filled with solutions of polymers or other non-volatile liquid substances of high viscosity. After evaporation those solutions leave on the column walls a thin film of polymer, which under the conditions of analysis is a very

viscous liquid. Separation of analyzed substances takes place inside them at the gas-liquid boundary. The most frequently uses polymers in such columns are polysiloxanes.

Detector in gas chromatographer measures the concentration of outflowing compounds in the eluent. An ideal detector should be sensitive only to the concentration itself, irrespective of the chemical structure of the analyzed compound. In practice, however, detectors have different sensitivity to various chemicals, which makes it necessary to calibrate them and set the so-called response factors for each chemical individually if exact percentage composition of the chemicals is to be measured in the analyzed sample.

There are the following types of detectors:

- Katharometer – in which measurement of concentration is based on changes in electric conduction with a change in the concentration of 'a foreign chemical compound' in carrier gas.
- Flame ionizing detector – which is a specific type of flame ionization spectrometer

This is one of the most frequently used detectors in gas chromatography. Its operation involves ionization (ionic decomposition) of molecules in flame and recording of changes in the potential. The primary element of that detector is flame (mostly hydrogen and air, hydrogen and oxygen); the flame is encircled by collecting electrode. During the operation, when only carrier gas flows through the detector (decomposed by ionization), a fixed potential is determined between flame and the electrode. When the determined substance reaches the detector, it will also be ionized, resulting in a change (increase) of the measured potential, which will be recorded as a measuring signal.

- Mass sensitive detector – which, in turn, is a specific type of mass spectrometer. That type of detector does not support accurate measurement of compound concentrations in the mixture, but instead it makes it possible to unambiguously identify the chemical structure of such compounds. Apparatuses with mass sensitive detector are often called *GC-MS (Gas chromatography - mass spectrometry).*
- Flame photometric detector – using the phenomenon of chemiluminescence.
- Electron capture detector – whose operation involves a sharp drop in the intensity of the current flowing in the ionization chamber after a substance with high electron affinity has been put inside it.
- Thermionic detector – which is a modification of the flame ionizing detector.

In the past the recorders were analogue pen recorders, sometimes equipped with an integrator, which simply 'drew' changes in voltage generated by the detector. These charts are traditionally called chromatograms.

Contemporary recorders are programs which automatically store and analyze chromatograms.

Fig 1 shows n outline of the chromatograph construction.

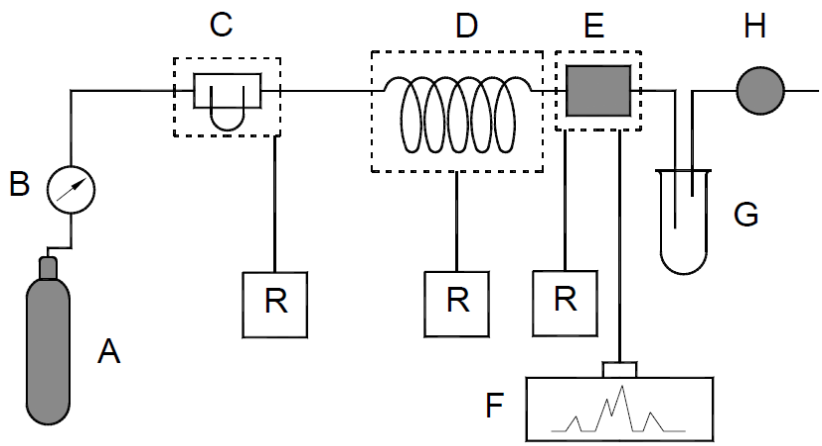

Fig. 1. An outline of the chromatograph

A - Compressed gas tank, B – pressure control and regulation, C - dispenser, D - column, E - detection, F – amplification and recording, G – trapping of fractions, H – measurement of flow rate, R – temperature control and regulation

Exercise procedure

Fig. 2 shows chromatographer which will be used to carry out the exercise.

The following steps should be taken when making measurements. Turn off the main reference gas valve and set the value of the working pressure at 0.4 MPa. Set the output pressure at 0.3 MPa. Connect the Flowmeter (10) and set the flow stream at approx. 40 cm^3/min. Set the required temperature of the columns with the knob (4) of the controller (3) depending on the analysis (60°C), dispensers, and the detector (with the controller 13) and turn on the thermostat. After obtaining the required temperatures of the dispensers, detector, and columns, turn on the power supply (6) and set the bridge current with the controller (8). Turn on the recorder and reset the indicator using knobs (7). After a proper base line has been obtained, as signalled by burning green light (5), start dosing the reference gas sample, and then the examined gas sample.

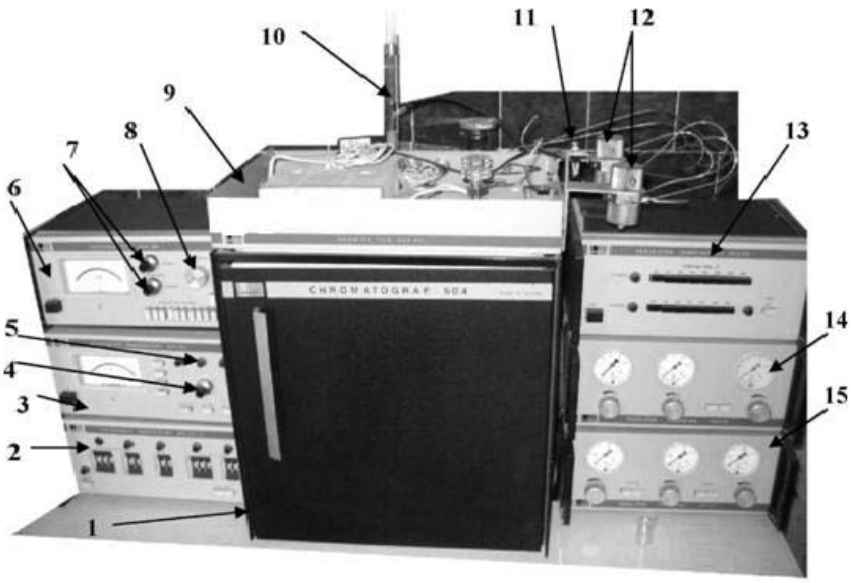

Fig. 2. A set for chromatographic gas analysis

1 – chromatographic columns, 2 – temperature program selector, 3 – temperature control of chromatographic columns, 4 – temperature control knob, 5 – temperature control indicating lamp, 6 – power supply unit, 7 – indicator reset knobs, 8 – bridge current controller, 9 - head, 10 - flowmeter, 11 - feeder switch, 12 - dispensers, 13 – dispenser temperature control, 14, 15 – flow controls.

The composition of the examined gas is determined by analyzing of the surface of plotted peaks with chromatograph type N-504. The analysis of the plotted peaks can be carried out by two methods: triangle (fig. 3 a) and using the peak height of its width at half height (fig. 3 b).

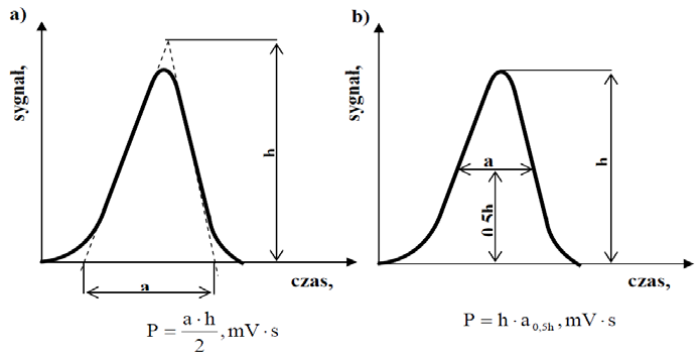

Fig. 3. Methods of peak area measurement

a – triangle method

b – method using the peak height and its width at half height

The quantitative analysis is based on linear dependence between the detector signal (peak area) and the concentration of the examined substance in carrier gas. The peak area is proportional to the amount of determined substance. It can be determined geometrically, planimetrically, or entirely by means of the integrator.

Processing of the results

On the basis of the received chromatograph specify the retention times and the peak areas of the individual gas components. On the basis of calculated peak areas of the components of reference gas and examined gas determine the composition of the analyzed gas.

Literature

1. http://www.afms.org/Docs/sample/BTU_Analysis.pdf
2. http://pages.pomona.edu/~wes04747/lab/gaschrom.doc

16. Determination of cold filter plugging point (CFPP)

The aim of the exercise is to determine the cold filter plugging point of diesel fuel and biodiesel.

The paraffins contained in fuel crystallize in the fuel system and are separated on filters, which causes them to block. Such phenomenon may occur when cold starting the engine in sub-zero ambient temperatures.

At low temperatures, diesel fuel is characterised by such values as the cloud point, i.e. the temperature at which the released paraffin crystals cause clouding of fuel (that temperature is a few degrees higher than CFPP) and the cold filter plugging point (CFPP), i.e. the highest temperature at which paraffin crystals clog up the fuel filter and block the flow. Cold filter plugging point (CFPP) is determined for diesel fuels and light heating oils. The method is applicable to fuels without additives and fuels containing additives that improve their liquidity or other improvers, intended mainly for powering compression-ignition engines.

Cold filter plugging point – is the temperature at which a given volume of fuel, cooled under standardised conditions, fails to pass through a standardised filtration system in a specified time.

Low-temperature parameters have an impact on a reduction or interruption of diesel fuel supply to the injection pump and the engine cylinder. A layer of paraffin hydrocarbons with a thickness greater than 3mm deposited on the surface of pre-filter meshes prevents suction of fuel from the tank.

Determination involves cooling a fuel sample under strictly defined conditions and, after each lowering of the temperature by 1°C, sucking in of the sample into the pipette through a standardised filter under the conditions of controlled negative pressure. Such determination should continue until the amount of paraffin crystals released from the solution causes stoppage or slowing down of the fuel flow, so much that pipette filling time exceeds 60 sec.

The indicated temperature at which the last suction started is recorded as the cold filter plugging point.

A) Refrigerator Bench

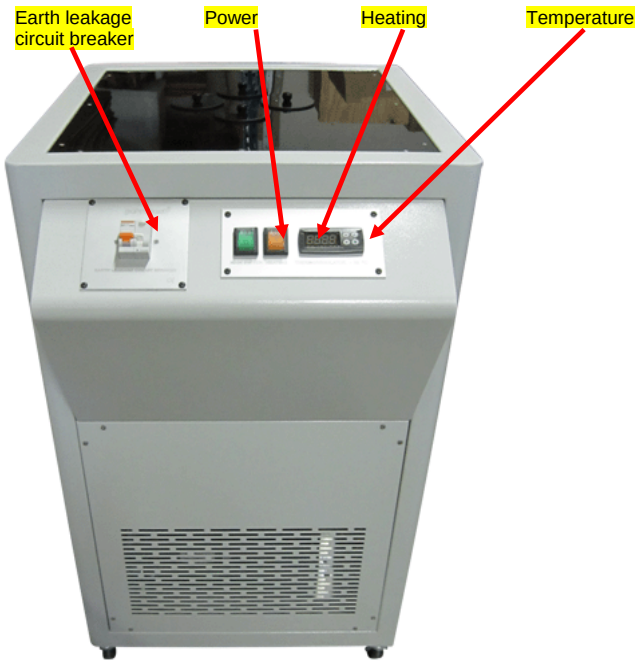

B) element of device

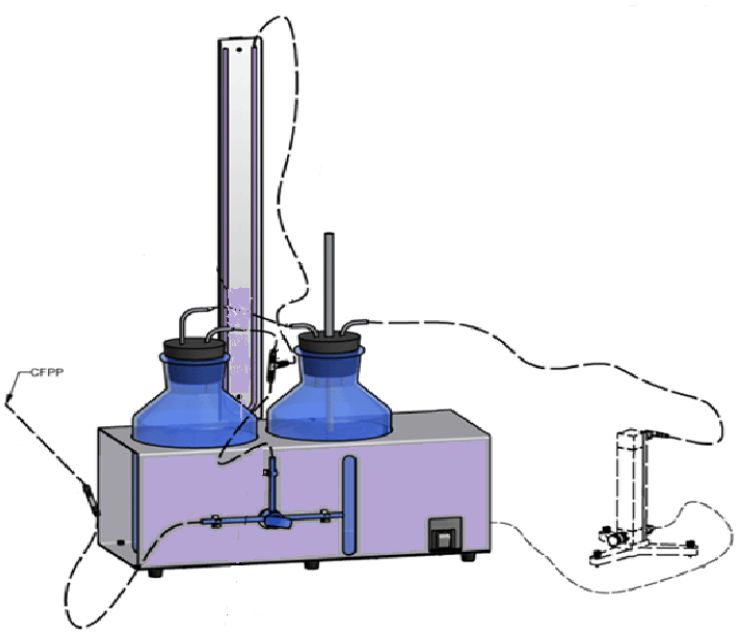

C) test jar

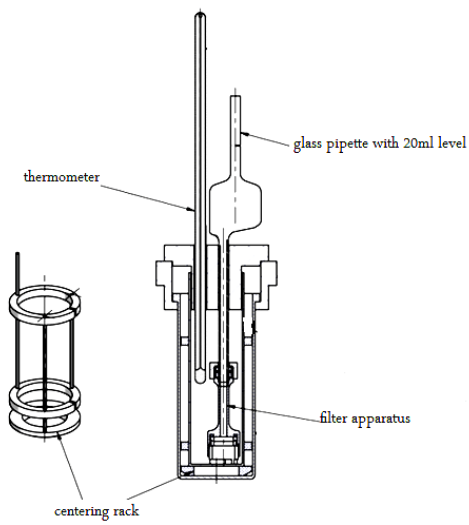

Fig. 1. The elements (A, B, C) of apparatus for the determination of the cold filter plugging point temperature of diesel and domestic heating fuels.

Procedure of test

1. Establish the cooling bath temperature at -34 ±0.5°C.
2. Place the insulating ring on the bottom of the jacket. If spacers are not mounted on the insulating ring, position them approximately 15 and 75 mm above the bottom of the test jar.
3. Pour the filtered specimen into the clean and dry test jar to the mark (45 cm^3).
4. Close the test jar with the stopper carrying the pipette with filter unit and the appropriate thermometer. Use a low-range thermometer if the expected CFPP is below -30°C.
5. Thermometers shall not be changed during the test. Adjust the apparatus in such a way that the bottom of the filter unit rests on the bottom of the test jar, and position the thermometer so that its lower end is 1.5 ± 0.2 mm above the bottom of the test jar. Take care to ensure that no part of the thermometer is not in contact with the side of the test jar or the filter body.

   The precise positioning of the thermometer in the test jar is a critical parameter of this test method. The position of the lower end of the thermometer above the bottom of the test jar can be indirectly measured by marking the stem of the thermometer flush with the

stopper when the lower end of the thermometer is just touching the bottom of the test jar, and then pulling the thermometer up such that the reference line is 1.5 ± 0.2 mm above the top of the stopper

6. Insert the test jar assembly in a stable vertical position into the jacket.
7. With the stopcock open to atmosphere; connect the pipette to the vacuum system by means of flexible tubing attached to the stopcock. Switch on the vacuum source and regulate to ensure an air flow rate of 15 dm^3/h in the vacuum regulator. Before starting a test, check that the U-tube manometer indicates a 200 ± 1 mm of water depression (2 ± 0.05 kPa).
8. Start the test immediately after inserting the test jar assembly into the jacket, but if the cloud point of the sample is known, it is permitted to wait until the specimen has cooled to a temperature of not less than 5°C above its cloud point.
9. When the specimen temperature reaches a suitable integer value, turn the stopcock so that the filter assembly is connected to the vacuum source, causing the specimen to be drawn through the wire mesh into the pipette; simultaneously start the stopwatch.
10. When the specimen reaches the mark on the pipette, stop the stopwatch and turn the stopcock to its initial position to vent the pipette and so allow the specimen to return to the test jar.
11. If the time taken to reach the mark exceeds 60 s on the first filtration, abandon the test and repeat it on a fresh portion, starting at a higher temperature.

    Repeat the operations for each 1°C decrease of the specimen temperature until the temperature is reached at which the pipette is not filled to the 20ml mark within 60 s. Record the temperature at which this last filtration was commenced as CFPP.

    A small minority of samples may exhibit anomalous aspiration behaviour, which can be detected by examining the observed aspiration times. This behaviour is marked by an unexpected reduction in the time taken to fill the pipette, after which aspiration time again continues to increase progressively, until the failure limit of 60 s is reached.
12. If the filter has not plugged when the temperature of the specimen reaches -20°C, continue the test by using a second cooling bath maintained at -51 ±1°C, quickly transferring the test jar and filtration assembly to a new jacket placed on the second cooling bath. Alternatively, for single bath apparatus, adjust the refrigeration unit to -51 ± 1°C.The new temperature must be reached within 2 min 30 s of the adjustment. Repeat the operations to each 1°C decrease of the specimen temperature.

13. If the filter has not plugged when the temperature of the specimen reaches -35°C, continue the test by using a third cooling bath maintained at -67 ±2°C by quickly transferring the test jar and filtration assembly to a new jacket placed on the second cooling bath. Alternatively, for single bath apparatus, adjust the refrigeration unit to -67 ± 2°C. The new temperature must be reached within 2 min 30 s of the adjustment. Repeat the operations at each 1°C decrease of the specimen temperature.
14. If the filter has not plugged when the temperature of the specimen reaches –51°C, discontinue the test.
15. If, after cooling, the specimen fills the pipette to the mark in less than 60 s, but does not flow back completely into the test jar when the pipette is vented to atmosphere through the stopcock before the start of the next aspiration, record the temperature at the commencement of the filtration as the CFPP.

Report

Report the temperature read or indicated at the beginning of the last filtration to the nearest 1°C, as the CFPP.

If the specimen has reached -51°C without plugging report as “Not plugged at -51°C.”

The report shall contain at least the following information:

- The type and identification of the product under test
- A reference to this test method
- The sampling procedure used
- The result of the test

Any deviation from the procedure described; and the date of the test.

Repeatability

The difference between results obtained on the same day by the same operator with the same apparatus under constant operating conditions on identical test material, would in the long run, with normal and correct operation of the test method, exceed 1.76°C only in one case in twenty.

Reproducibility

The difference between two single and independent results obtained by different operators working in different laboratories on identical test material, would in the long run, in the normal and correct operation of the test method, exceed the values indicated by the formula:

0.102 (25-X) °C

Where:
X is the average of the two results being compared, only in one case in twenty.

Literature

1. ASTM D6371 - 05(2010) Standard Test Method for Cold Filter Plugging Point of Diesel and Heating Fuels
2. http://www.yokogawa.com/us/is/downloads/pdf/analytical/APPNOTES/NR800_01.pdf
3. http://www.bp.com/liveassets/bp_internet/australia/corporate_australia/STAGING/local_assets/downloads_pdfs/f/Fuels_winter_Understanding_CFPP.pdf
4. ASTM Standards D2500 Test Method for Cloud Point of Petroleum Products
5. ASTM Standards D4057 Practice for Manual Sampling of Petroleum and Petroleum Products
6. ASTM Standards D4177 Practice for Automatic Sampling of Petroleum and Petroleum Products
7. ASTM Standards D5771 Test Method for Cloud Point of Petroleum Products (Optical Detection Stepped Cooling Method)
8. ASTM Standards D5772 Test Method for Cloud Point of Petroleum Products (Linear Cooling Rate Method)
9. ASTM Standards D5773 Test Method for Cloud Point of Petroleum Products (Constant Cooling Rate Method)
10. ASTM Standards E1 Specification for ASTM Liquid-in-Glass Thermometers
11. ISO Standards IP3310 Test sieves - Technical requirements and testing - Part 1: Metal cloth
12. EN116 Diesel and domestic heating fuels - Determination of cold filter plugging point

17. Determination of aniline point

The aim of the exercise is to determine the aniline point of diesel fuel.

Introduction

One of the traditional research methods, used for approximate estimation of the group composition of hydrocarbons and dissolving properties of hydrocarbon solvents, is the so-called aniline point.

Hydrocarbons of a single group with similar fractional composition, distilling within narrow temperature ranges, have similar values of the aniline point. On the other hand, hydrocarbons from different groups have different aniline points. Therefore, an aniline point measurement provides an approximate assessment of the group composition of hydrocarbon mixtures.

The solubility of aniline in diesel fuel depends on the contents of the respective hydrocarbon groups, and in particular on the contents of aromatic compounds.

Whereas aromatic compounds have the lowest aniline point, paraffin compounds have the highest one. Naphthenic and olefin hydrocarbons have intermediate values of the aniline point.

Solubility of aromatic hydrocarbons in aniline is greater than in the case of alkanes and alkenes. Solubility of the latter two hydrocarbon groups rapidly decreases with the lowering of the temperature, and at a certain temperature the solution breaks up. The lower the aniline point of a petroleum product, the higher the content of aromatic hydrocarbons. The aniline point is a characteristic value of individual hydrocarbons.

Within a particular hydrocarbon group, the aniline point increases along with an increase in the molecular mass. The aniline point has been used for rapid, approximate determination of the contents of aromatic hydrocarbons. The aniline point is one of the basic parameters characterising the properties of hydrocarbon solvents with respect to the ability to dissolve various substances. Knowledge of the aniline point enables prediction of the product effect on elastomers. The lower the aniline point, the greater the product's propensity to rubber swelling. The lower the aniline point, the greater the observed swelling of the rubber.

Aniline Point (**AP** – aniline point) – is the minimum equilibrium solution temperature for equal volumes of aniline and sample. When the examined product has the aniline point below the melting point of aniline (6°C), the so-called mixed aniline point is determined.

Mixed Aniline Point– is the minimum equilibrium solution temperature of a mixture of two volumes of aniline, one volume of sample, and one volume of n-heptane of specified purity.

Outline of determination

Specified volumes of aniline and sample or aniline and sample plus diluent are placed in a tube and mixed mechanically. The mixture is heated at a controlled rate until the two phases become miscible. The mixture is then cooled at a controlled rate and the temperature at which the two phases separate is recorded as the aniline point or mixed aniline point.

Reagents

Dry aniline over potassium hydroxide pellets, decant, and distil fresh on the day of use, discarding the first and last 10 per cent. Aniline thus prepared shall give an aniline point of 69.3 ± 0.2^{o}C as determined from the average of two independent tests having a difference of not over 0.1 ^{o}C.

Apparatus shown in Fig. 1

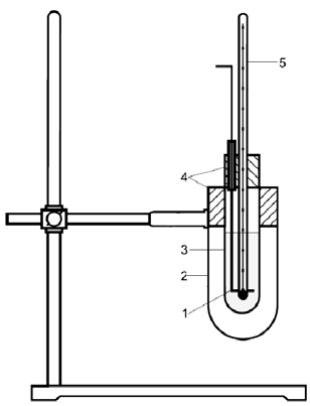

Fig. 1.—Aniline Point Apparatus.

1 – Stirrer, 2 – Jacket tube, 3 – Test tube, 4 – corks, 5 – Aniline point thermometer

Procedure:

Clean and dry the apparatus. Pipet 10 cm^3 of aniline and 10 cm^3 of the dry sample into the air-jacketed tube fitted with stirrer and thermometer. If the material is too viscous for pipetting, weigh to the nearest 0.01 g a quantity of the sample corresponding to 10 cm^3 at room temperature. Center the thermometer in the test tube so that the immersion mark is at the liquid level, making sure that the bulb does not touch the side of the tube.

Stir the sample rapidly, using a 2-in. stroke, avoiding the inclusion of air bubbles, and, if necessary heating at a rate of approximately 1 to 3°C per minute until complete miscibility is obtained, by applying heat directly to the jacket tube. If the aniline sample mixture is

completely miscible at room temperature, substitute a nonaqueous cooling bath for the heating source. Continue stirring and allow the mixture to cool slowly at a rate of 0.5 to 1.0°C per min. Continue cooling to a temperature of 1 to 2 °C below the first appearance of turbidity and record as the aniline point the temperature at which the mixture suddenly becomes cloudy throughout. This will be the minimum equilibrium solution temperature and not the temperature of separation of minor portions of the samples. Repeat the observation of aniline point temperature by heating and cooling repeatedly until a report as directed in Report can be made.

Report

If the range of three successive observations of the aniline point temperature is not greater than 0.1°C for light-coloured samples or 0.2°C for dark samples, report the average temperature of these observations, corrected for thermometer calibration errors, to the nearest 0.05°C as the aniline point.

If such a range is not obtained after five observations, repeat the test using fresh quantities of aniline and sample in a clean, dry apparatus; and if consecutive temperature observations show a progressive change, or, if the range of observations is greater than the repeatability given in ***Precision*** report the method as being inapplicable.

Precision

The following data should be used for judging the acceptability of results (95 per cent probability):

Repeatability.—Duplicate results, that is, two average temperatures obtained by the same operator in a series of observations as described under ***Report***, should be considered suspect if they differ by more than the following amounts:

Aniline Point of:	Repeatability
Clear, light-coloured samples	0.16°C
Moderately dark to very dark samples	0.3°C

Literature

1. ASTM Standards D1500 Test Method for ASTM Color of Petroleum Products (ASTM Color Scale)
2. ASTM Standards E1 Specification for ASTM Liquid-in-Glass Thermometers

18. Determination of combustion heat and calorific value of liquid fuels

The aim of the exercise is to determine the combustion heat and calorific value of diesel fuel and biodiesel.

Introduction

Fuel quality in terms of energy can be assessed by reference to the definition of heat of combustion or calorific value.

Heat of combustion Q_c [kJ/kg; kJ/kmol; kJ/nm^3] is the amount of heat released to the environment, evolved in the isobaric process of complete and perfect combustion of a unit of fuel mass, where the temperature of combustion products equals the temperature of substrates (fuel and air) and the water vapour present in the fuel and formed as a result of hydrogen oxidation has been condensed.

In technical processes combustion products generally have the temperatures at which water is in gaseous state, and hence evaporation heat contained in exhaust gases is not recovered. The calorific value is a kind of heat that takes into account the heat of evaporation of the resulting water.

The calorific value Q_w is the amount of heat released to the environment, evolved in the isobaric process of complete and perfect combustion, per unit of fuel mass, where the temperature of combustion products equals the temperature of substrates and the water present in combustion products is not condensed.

The method of measuring combustion heat of liquid fuels involves complete and perfect combustion of a fuel sample in oxygen atmosphere with appropriate oxygen pressure in the calorimetric bomb. The emitted combustion heat is measured in a water calorimeter on the basis of measurement of the rise in water temperature – fig. 1.

Figure 1. Calorimeter for determining heat of combustion

The basic elements of the calorimeter are: the calorimetric bomb, the calorimetric vessel, and the water jacket that acts as the thermal insulator. The calorimetric bomb is a thick-walled vessel with a capacity of approximately 300÷400 cm3. The bomb construction – the shield and the cover – should withstand the pressure of up to 200 bar. The bombs are usually made of stainless acid-proof steel. The bomb is filled with oxygen at a pressure depending on the type of fuel (2.0÷3.5 MPa). Fuel is burnt explosively in the isochoric process, which causes a further increase in pressure.

There are two valves hidden in the bomb head (cover): inlet and outlet as well as two electrodes. One of the electrodes is isolated from the head with a porcelain gasket. The second one is connected with the inlet valve and a pipe reaching down almost to the bottom of the bomb, which enables supply of oxygen closer to the crucible. The crucible is fixed in a holder mounted slidingly on the pipe. The crucible is made of acid-proof, stainless steel or quartz. At the bottom of the crucible there is the examined fuel sample together with a steel wire connected to the electrodes.

The cylindrical, calorimetric vessel is made of stainless material and is covered on the outside with chrome-nickel material. The vessel should be of such dimensions that the calorimetric bomb is covered from the top with water and the distance from the bomb and vessel walls measures approx. 20 mm. The vessel capacity should not be excessive so that the rise in water temperature is sufficiently large and measurable. In the area between the bomb and the vessel put a thermal sensor with an adjustable range and the accuracy of 0.001 ^{o}C as well as a stirrer that ensures equalisation of water temperature. The vessel is covered with a two-part cover, which restricts heat exchange with the environment. The water jacket should have large heat capacity, so that the water temperature inside it does not change during the measurement. The distance between the calorimetric vessel and the water jacket should be in the range of 10÷30 mm. The vessel is placed on a stand made of material with low thermal conductivity.

Making a measurement

For combustion in bomb, prepare a sample in the amount of 1 g. accurate to 0.0001 g.

Fill the bomb with oxygen to a pressure of 3 bars.

Choose the water temperature in the calorimetric vessel that is lower by approx. 0.5 ÷1.5ºC than the water temperature in the jacket. Accordingly, after combustion the water temperature in the vessel will be higher by the same temperature from the jacket temperature.

Put the bomb and the calorimetric vessel prepared in the above way into the water jacket.

After starting the stirrer and waiting for 5to 10 min enter the data into the computer program and launch the program.

Despite detonative character of combustion, change in water temperature is stretched over a period of time during which the heat emitted in the bomb passes through its shield to the water in the vessel. Thus, the bomb shield, the water in the vessel, and its walls are heated, while there is a bilateral heat exchange, first from the jacket to the vessel, and then vice versa. The phenomena of heat exchange taking place in the calorimeter are the result of, in succession, conduction, transfer, and radiation. Those phenomena distort the temperature progression over time.

Calculation of calorific value

Calorific value related to the analytical status Q_t^a will be calculated in kJ/kg according to the following formula:

$$Q_t^a = Q_s^a - 24.42 \bullet (W^a + 8.94 \bullet H^a)$$

where:

Q_s^a − heat of fuel combustion in the analytical status

24.42− heat of water evaporation at a temperature of 25 ^{o}C

W^a − water content in the sample

8.94 − conversion factor of hydrogen content to water

H^a − hydrogen content in the analytical sample of fuel

<u>Literature</u>

1. http://www.engineeringtoolbox.com/fuels-higher-calorific-values-d_169.html
2. http://www.tulyasys.com/port/Applied_Chemistry.pdf
3. http://www.freestudy.co.uk/ncthermo2007/3t1.pdf